Posts, Post Stands, Strut Clamps

Hex Posts

Product Name	Small Dia. Hex Posts	Hex Posts - Both Ends Tapped	One End Threaded One End Tapped	One End Threaded One End Tapped / Both Ends Threaded, Thread Length & Dia. Configurable	Pilot Selectable / Configurable	Hex Posts - One End Tapped
Page	2116	2117	2119	2121	2123	2125

Circular Posts / Square Post

One End Threaded	Attachment Blocks for Hex Posts	Circular Posts - Both Ends Tapped, Wrench Flats	One End Threaded One End Tapped, Wrench Flats	One End Threaded One End Tapped / Both Ends Threaded, Thread Length & Dia. Configurable, Wrench Flats
2125	2126	2127	2129	2131

Circular Posts - Pilot Selectable / Pilot & Wrench Flats Configurable	One End Tapped / One End Threaded	Plastic Circular Posts - One End Tapped / Both Ends Tapped	Square Posts - Both Ends Tapped, One End Threaded One End Tapped	Spacer Blocks	Posts for Stands
2133	2135	2136	2137	2139	2143

Posts for Stands Device Stands

Caps for Hollow Posts	Posts for Stands - With Scale	Length Configurable with Scale	Device Stands - Compact	Compact, Slotted Hole	Round Flanged	Square Flanged
2143	2144	2144	2145	2146	2147	2149

Post Stands

Square Flanged, Slotted Holes	Side Mounting, Compact	Side Mounting	Stand-Up Brackets - Economy Type	Standard Type	Stand-Up Brackets - Cylindrical
2150	2151	2152	2153	2153	2154

Reversed Fastening	Square Standard	Square Right/Left Reversed	Square Compact	Non-Flanged Side Mounting	Side Mounting	Side Mounting, Dowel Hole
2154	2155	2155	2156	2156	2157	2157

Side Mounting, Compact	Side Mounting, Casting	Side Mounting, Casting, Dowel Holes	Side Mounting, Slotted Holes	Posts for Stands - Square Bars, Square Tubes	Length Configurable with Scale	Square Hole - Standard	Square Hole - Side Mounting Holes
2157	2158	2158	2158	2159	2159	2160	2160

Strut Clamps

	Round Strut Clamp -Equal Dia., Perpendicular Configuration	Strut Clamps - Equal Dia., Perpendicular Configuration / Reversed	Super Compact Strut Clamps - Equal / Unequal Dia., Perpendicular Configuration	Resin - Equal Dia., Perpendicular Configuration	Super Compact Strut Clamps - Equal / Unequal Dia., Perpendicular Configuration with Wing Knobs
	2163	2164	2165	2165	2166

Strut Clamps - Equal Dia., Perpendicular Configuration with Clamp Levers	Compact Strut Clamps - Equal Dia., Perpendicular Configuration	Unequal Dia., Perpendicular Configuration	Unequal Dia., Perpendicular Configuration / Reversed	Perpendicular Configuration, Hole Pitch Selectable	Height Adjustment Screw Set for Strut Clamps
2166	2167	2167	2168	2169	2170

Split, (Equal/Unequal Dia., Perpendicular Configuration)	Equal Dia., Perpendicular Configuration, Split, T-Shaped	Parallel Holes, Pitch Selectable	Equal Dia., Rotation	Unequal Dia., Rotation	Square / Round Hole, Rotation
2171	2171	2172	2173	2173	2174

Super Compact Strut Clamps - Vertical / Parallel Taps with Wing Knobs	(Vertical / Parallel Taps)	With Clamp Lever (Vertical / Parallel Taps)	Vertical Taps	Parallel Taps	Split (Vertical/Parallel Taps)
2175	2175	2176	2177	2178	2179

Strut Clamps - Anti-Rotation, Parallel Taps	Square & Round / Square & Square, Perpendicular Configuration	Vertical / Parallel Taps, Square Hole	Slotted Hole	L-Shaped	Arm
2180	2181	2182	2183	2183	2184

Hollow Stands Rotary Connectors

Bar Clamps	Flexible Clamps	Holder Pipes	Flexible Clamps - Compact	Hollow Stands - Set Screw	Welded	Hollow Stands - Pipe Threaded
2184	2185	2185	2186	2187	2188	2189

Pipe Threaded, Welded	Rotary Connectors - Round Flanged / Compact Flanged	Moment Load Allowable - Single Flanged, Double Flanged	Height Adjusting Toggle Clamp	Device Stand Set	Square Post Stand Set
2189	2191	2192	2139	2148	2174

Guide to Posts: Large Qty. & Discounts Expanded Ranges

Small Dia. Hex Posts

Ave. 43% discount from Qty. 30pcs.!
Ave. 81% discount from Qty. 50pcs.!

Quantity	1~29	30~49	50~99
Discount Rate	Unit Price	43% Ave.	81% Ave.

Hex Posts

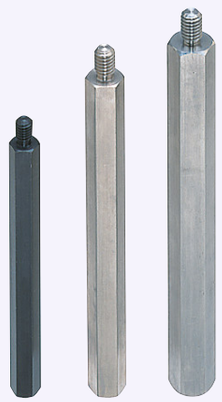

(Previously) Qty. 100pcs. or more were subject to RFQ•••

Max. discount up to 30% from Qty. 301pcs!
Max. discount up to 35% from Qty. 501pcs!

Previous

Quantity	1~9	10~14	15~19	20~49	50~100
Discount Rate	Unit Price	5%	10%	18%	23%

From 2014 Catalog

Qty. Class	Std. Order						
	Sm. Lot						Lg. Lot
Quantity	1~9	10~14	15~19	20~49	50~300	301~500	501~600
Discount Rate	Unit Price	5%	10%	18%	23%	30% Max.	35% Max.

Except Trivalent Chromate and Clear Anodize

Circular Posts

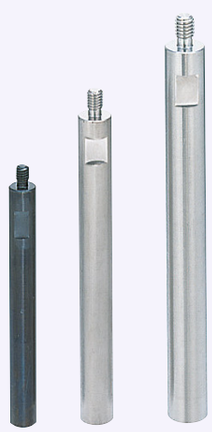

(Previously) Qty. 100pcs. or more were subject to RFQ•••

Max. discount up to 30% from Qty. 301pcs!
Max. discount up to 40% from Qty. 501pcs!

Previous

Quantity	1~9	10~14	15~19	20~49	50~100
Discount Rate	Unit Price	5%	10%	18%	23%

From 2014 Catalog

Qty. Class	Std. Order						
	Sm. Lot						Lg. Lot
Quantity	1~9	10~14	15~19	20~49	50~300	301~500	501~600
Discount Rate	Unit Price	5%	10%	18%	23%	30% Max.	40% Max.

Except Trivalent Chromate and Clear Anodize
Except D=35, 40, 50
Excluding **P.2133** w/pilot page

Guide to New Products & Shortened Delivery Time

Introducing the new products

New, easy clamping Round Strut Clamp
with a groove machined around the shaft bore is introduced!

44% Max. Price Reduced

* Compared to Strut Clamps - Equal Dia., Perpendicular Configuration (KDST, MDKT, ALKD, HLKD)

Features of Round Strut Clamps

[Round]

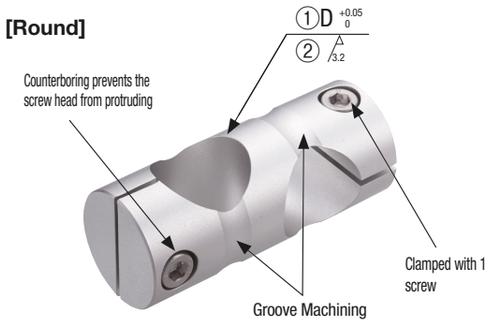

① Shaft Bore Tolerance	0~+0.05
② Shaft Bore Surface Roughness	Ra3.2
⇒ Fits of Shafts and Bores	Med. Accuracy

For mating, g6, f8 shaft tolerances are recommended.

[Similar Product: Square Type]

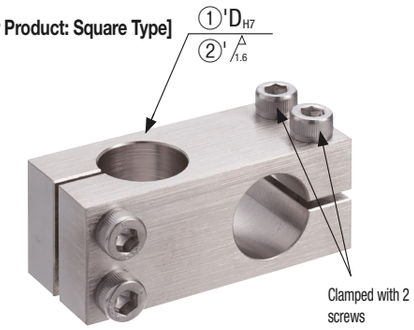

①'Shaft Bore Tolerance	H7
②'Shaft Bore Surface Roughness	Ra1.6
⇒ Fits of Shafts and Bores	High Accuracy

For mating, g6 shaft tolerance is recommended.

The round type•••
- No material on four corners
- Easy to clamp due to the machined groove around the shaft bore

Therefore, the Round Strut Clamps
exhibit sufficient clamping force and improve work efficiency!

For details of Round Strut Clamps, see P.2163.

Guide to Shortened Delivery Time

Subject Products	Stand-Up Brackets				Strut Clamps
	Square Standard SAQB, SAQM, SBQB, SBQM	Side Mounting CLTB, CLTM	Side Mounting, Dowel Hole CLPK, CLPM	Side Mounting, Compact CLCB, CLCNM	Equal Dia., Perpendicular Configuration KDST, MDKT, ALKD, HLKD
Page	P.2155	P.2157	P.2157	P.2157	P.2164

Post (Hex, Square and Circular)
Overview

Small Dia. Hex Posts
Both Ends Tapped / One End Threaded One End Tapped

Misumi Round Pole Lineups

For posts, see the following:

Product Name	Posts (for post use)
App. Example	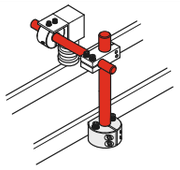
Page	P.2115
Shaft Dia. Tolerance	0 / -0.1
Material / Hardness	EN 1.0038 Equiv./Steel for General Structure: EN 1.4301 Equiv.

P.2-301~

For materials, see the following:

Product Name	Round Bars (Material)			
App. Example				
Shaft Dia. Tolerance	0 / -0.1	0 / -0.2	±0.1~0.4	
Material / Hardness	Stainless Steel/Aluminum/Carbon Steel Chromium Molybdenum Steel/Copper			

P.819~

For rotational use, see the following:

Product Name	Rotary Shaft (For Rotation)
App. Example	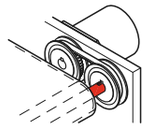
Shaft Dia. Tolerance	h7 / g6 / h9
Material / Hardness	EN 1.1191 Equiv. EN 1.4301 Equiv.

P.107~

For linear motion use, see the following:

Product Name	Shaft (For Linear Motion use)
App. Example	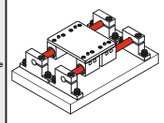
Shaft Dia. Tolerance	g6 / f8 / h5
Material / Hardness	EN 1.3505 Equiv., 58HRC~EN 1.1191 Equiv. or EN 1.4301 Equiv., EN 1.4125 Equiv. 55HRC~

Shape and Material Selection List

Shape Name, Type		Shape	Hex Posts: Steel (EN 1.0038 Equiv./Steel for general structure*) No Surface Treatment	Black Oxide	Electroless Nickel Plating	Trivalent Chromate	Stainless Steel (EN 1.4305 Equiv., 304) No Surface Treatment	Aluminum (EN AW-2011 Equiv.) Clear Anodize	Page	Circular Posts: Steel (EN 1.0038 Equiv./Steel for general structure) No Surface Treatment	Black Oxide	Electroless Nickel Plating	Trivalent Chromate	Stainless Steel (EN 1.4301 Equiv.) No Surface Treatment	Aluminum (EN AW-2017 Equiv.) Clear Anodize	Plastic (Polyacetal)	Page
Both Ends Tapped	Small Dia.		-	●	●	-	●	-	P.2116	-	-	-	-	-	-	-	-
	Standard		●	●	●	●	●	●	P.2117	●	●	●	●	●	●	●	P.2127 P.2136
One End Threaded One End Tapped	Small Dia.	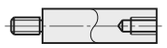	-	●	●	-	●	-	P.2116	-	-	-	-	-	-	-	-
	Standard		●	●	●	●	●	-	P.2119 P.2121	●	●	●	●	●	-	-	P.2129 P.2131
Both Ends Threaded	Standard		●	●	●	-	●	-	P.2121	●	●	●	-	●	-	-	P.2131
Pilot	Both Ends Tapped		●	●	●	-	●	-	P.2123	●	●	●	-	●	-	-	P.2133
	One End Threaded One End Tapped	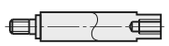	●	●	●	-	●	-	P.2123	●	●	●	-	●	-	-	P.2133
	Both Ends Threaded		●	●	●	-	●	-	P.2123	●	●	●	-	●	-	-	P.2133
One End Tapped	Standard	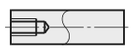	●	●	●	-	●	-	P.2125	●	●	●	-	●	-	●	P.2135 P.2136
One End Threaded	Standard		●	●	●	-	●	-	P.2125	●	●	●	-	●	-	-	P.2135

*Small diameter hex posts (only) are partly EN 1.0762 Equiv.

Shape Name, Type		Shape	Square Post: Steel (EN 1.0038 Equiv./Steel for general structure) -	Black Oxide	Electroless Nickel Plating	Stainless Steel (EN 1.4301 Equiv.) -	Page
Square Post	Both Ends Tapped	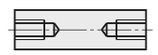	●	●	●	●	P.2137
	One End Threaded One End Tapped	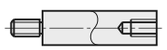	●	●	●	●	P.2137

*For posts with an O.D. g6 tolerance combined with post stands and strut clamps, refer to **P.2143**

Relief Dimension of Threaded Post (Reference)

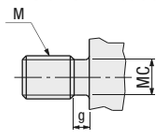

M	MC	g
2	1.5	0.8
2.6	2.1	0.8
3	2.3	1.0
4	3	1.2
5	3.9	1.5
6	4.3	2.0
8	6.2	2.5
10	8	3.0
12	9.8	
16	13.6	
20	17	4.0
24	20	5.0
27	23	
30	26	

Features: Suitable when space is limited.

Small Dia. Hex Posts

Type: Both Ends Tapped	Type: One End Threaded One End Tapped	M Material	S Surface Treatment
BSLCB	BSLCG	Steel for general structure is EN 1.0762 Equiv.	Black Oxide
PSLCB	PSLCG		Electroless Nickel Plating
SLCB	SLCG	EN 1.4305 Equiv.	-

RoHS

·Both Ends Tapped

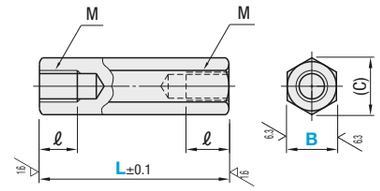

·One End Threaded One End Tapped

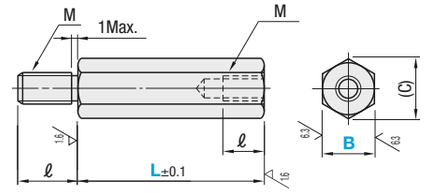

Part Number: Type	B	L Selection															M	ℓ	(C)
Both Ends Tapped / One End Threaded One End Tapped																			
BSLCB / BSLCG	*4	5	6	7	8	9	10					15				20	M2	5	4.6
PSLCB / PSLCG	*5	5	6		8	9	10					15				20	M2.6	5	5.8
SLCB / SLCG	5.5	5	6	7	8	9	10	11	12	13	14	15	16	17	18	20	M3	6	6.3

* B Dimensions 4 and 5 are only applicable to SLCB and SLCG. Antirust Oil is applied to posts with black oxide and electroless nickel plating finish.
When L≤Mx6, the Pilot Hole for Both Ends Tapped Type may go through.
For One End Threaded One End Tapped Type, when L dimensions are 5 and 6, then ℓ dimensions are 3 and 4 respectively.

Ordering Example

Part Number	-	L
BSLCB 5.5	-	12
SLCG 5	-	20

Both Ends Tapped

Part Number: Type	B	L	Qty. Unit Price 1~29	Volume Discount Rate 30~49	50~100
EN 1.0038 Equiv. or EN 1.0762 Equiv. Black Oxide BSLCB	5.5	5~12			
		13~20			
EN 1.0038 Equiv. or EN 1.0762 Equiv. Electroless Nickel Plating PSLCB	5.5	5~12			
		13~20			
EN 1.4305 Equiv. SLCB	4	5~10			
		15, 20			
	5	5~10			
		15, 20			
	5.5	5~12			
		13~20			

For orders larger than indicated quantity, please check with WOS.

One End Threaded One End Tapped

Part Number: Type	B	L	Qty. Unit Price 1~29	Volume Discount Rate 30~49	50~100
EN 1.0038 Equiv. or EN 1.0762 Equiv. Black Oxide BSLCG	5.5	5~12			
		13~20			
EN 1.0038 Equiv. or EN 1.0762 Equiv. Electroless Nickel Plating PSLCG	5.5	5~12			
		13~20			
EN 1.4305 Equiv. SLCG	4	5~10			
		15, 20			
	5	5~10			
		15, 20			
	5.5	5~12			
		13~20			

For orders larger than indicated quantity, please check with WOS.

Hex Posts

Both Ends Tapped

Both Ends Tapped

Type: L Dimension Selectable	Type: L Dimension Configurable	Type: L Dimension, Thread Dia. Configurable	M Material	S Surface Treatment
-	NLSFB	NLSBF	*EN 1.0038 Equiv.	-
LSBRK	LSFB	LSBF		Black Oxide
PLSBRK	PLSFB	PLSBF		Electroless Nickel Plating
-	BLSFB	BLSBF		Trivalent Chromate (Black)
SLSBRK	SLSBFA	SLSBF	EN 1.4301 Equiv.	-
-	ALSFB	ALSBF	EN AW-2011 Equiv.	Clear Anodize

*For L dimension selectable products, steel for general structure is used.

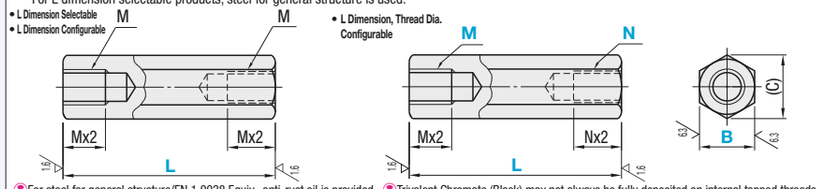

Part Number ☐ is not RoHS compliant. RoHS

For steel for general structure/EN 1.0038 Equiv., anti-rust oil is provided. Trivalent Chromate (Black) may not always be fully deposited on internal tapped threads.

L Dimension Selectable

Part Number Type	B	L Selection	M (Coarse)	(C)
General Structural Steel LSBRK PLSBRK / EN 1.4301 Equiv. SLSBRK	6	15 20 25 30 35 40 45 50	3	6.9
	7	20 25 30 35 40 45 50 60 70 80 90 100 110 120 130 140 150	4	8.1
	8	20 25 30 35 40 45 50 60 70 80 90 100 110 120 130 140 150 200	5	9.2
	10	25 30 35 40 45 50 60 70 80 90 100 110 120 130 140 150 200	6	11.5
	12	25 30 35 40 45 50 60 70 80 90 100 110 120 130 140 150 200	6	13.9
	13	35 40 45 50 60 70 80 90 100 110 120 130 140 150 200	8	15.0
	14	35 40 45 50 60 70 80 90 100 110 120 130 140 150 200	8	16.2
	17	40 45 50 60 70 80 90 100 110 120 130 140 150 200	10	19.6
	19	50 60 70 80 90 100 110 120 130 140 150 200	12	21.9

L Dimension Configurable

Part Number Type	B	L 0.5mm Increment	M (Coarse)	(C)
EN 1.0038 Equiv. NLSFB LSFB PLSFB BLSFB / EN 1.4301 Equiv. SLSBFA / EN AW-2011 Equiv. ALSFB	*5	8~50	2.6	5.8
	6	8~50	3	6.9
	7	10~150	4	8.1
	8	15~250	5	9.2
	10	25~350	6	11.5
	12	25~400	6	13.9
	13	30~400	8	15.0
	14	25~500	8	16.2
	17	40~500	10	19.6
	19	50~500	12	21.9
	24	50~600	16	27.7
	27	60~700	20	31.2
	30	60~800	20	34.6
	32	75~800	24	36.9

When L≤Mx4, tapped hole goes through.
When L≤(Mx2+5)+(Nx2+5), the pilot hole may go through.
* B=5 is not available for EN AW-2011 Equiv. material.

L Dimension Tolerance

L	8 ~	300	±0.1
L	300.5 ~	600	±0.3
L	600.5 ~	800	±0.4

However, when L≤200, and when order volume at one time is less than 10 pcs., since the processing is done simultaneously, the difference of L dimension is within ±0.02.
Except L Dimension Selectable

L Dimension, Thread Dia. Configurable

Part Number Type	B	L 0.5mm Increment	M (Coarse) / N (Coarse) Selection	(C)
EN 1.0038 Equiv. NLSBF LSBF PLSBF BLSBF / EN 1.4301 Equiv. SLSBF / EN AW-2011 Equiv. ALSBF	*5	8~50	2 2.6	5.8
	6	15~50	3 4	6.9
	7	15~150	3 4 5	8.1
	8	20~250	3 4 5 6	9.2
	10	25~350	4 5 6 8	11.5
	12	25~400	4 5 6 8	13.9
	13	30~400	4 5 6 8 10	15.0
	14	30~500	4 5 6 8 10	16.2
	17	40~500	5 6 8 10 12	19.6
	19	50~500	5 6 8 10 12 16	21.9
	24	60~600	6 8 10 12 16 20	27.7
	27	60~700	6 8 10 12 16 20	31.2
	30	75~800	6 8 10 12 16 20 24	34.6
	32	75~800	6 8 10 12 16 20 24	36.9

L≥Mx2+Nx2
* B=5 is not available for EN AW-2011 Equiv. material.

Ordering Example

Part Number	-	L	-	M	-	N
(L Dimension Selectable) LSBRK13	-	100				
(L Dimension Configurable) LSFB6	-	48				
(L Dimension & Thread Dia. Configurable) LSBF10	-	200	-	M4	-	N6

Alterations

Part Number	-	L	-	M	-	N	-	(LKC)
LSFB6	-	42					-	LKC
LSBF10	-	200	-	M4	-	N6	-	LKC

Applicable to L Dimension Configurable Type and L Dimension & Thread Dia. Configurable Type.

Alterations	Code	Spec.
L Dimension Tolerance (LKC)	LKC	L Dimension tolerances are as follows: Ordering Code LKC

L	L Tolerance
8~300	±0.05
300.5~600	±0.10
600.5~800	±0.15

L Dimension Selectable

Part Number Type	B	Min. L ~ 50	L60~100	L110~150	L200
General Structural Steel Black Oxide LSBRK	6		-	-	-
	7				-
	8				
	10				
	12				
	13				
	14				
	17				
	19				

Part Number Type	B	Min. L ~ 50	L60~100	L110~150	L200
General Structural Steel Electroless Nickel Plating PLSBRK	6		-	-	-
	7				-
	8				
	10				
	12				
	13				
	14				
	17				
	19				

Part Number Type	B	Min. L ~ 50	L60~100	L110~150	L200
EN 1.4301 Equiv. SLSBRK	6		-	-	-
	7				-
	8				
	10				
	12				
	13				
	14				
	17				
	19				

L Dimension Configurable

Part Number Type	B	Min. L ~ 200	L200.5~400	L400.5~600	L600.5~800
EN 1.0038 Equiv. NLSFB	5		-	-	-
	6		-	-	-
	7		-	-	-
	8			-	-
	10			-	-
	12			-	-
	13			-	-
	14				-
	17				-
	19				-
	24				-
	27				
	30				
	32				
EN 1.0038 Equiv. Black Oxide LSFB	5		-	-	-
	6		-	-	-
	7		-	-	-
	8			-	-
	10			-	-
	12			-	-
	13			-	-
	14				-
	17				-
	19				-
	24				-
	27				
	30				
	32				

Part Number Type	B	Min. L ~ 200	L200.5~400	L400.5~600	L600.5~800
EN 1.0038 Equiv. Electroless Nickel Plating PLSFB	5		-	-	-
	6		-	-	-
	7		-	-	-
	8			-	-
	10			-	-
	12			-	-
	13			-	-
	14				-
	17				-
	19				-
	24				-
	27				
	30				
	32				
EN 1.0038 Equiv. Trivalent Chromate BLSFB	5		-	-	-
	6		-	-	-
	7		-	-	-
	8			-	-
	10			-	-
	12			-	-
	13			-	-
	14				-
	17				-
	19				-
	24				-
	27				
	30				
	32				

Part Number Type	B	Min. L ~ 200	L200.5~400	L400.5~600	L600.5~800
EN 1.4301 Equiv. SLSBFA	5		-	-	-
	6		-	-	-
	7		-	-	-
	8			-	-
	10			-	-
	12			-	-
	13			-	-
	14				-
	17				-
	19				-
	24				-
	27				
	30				
	32				
EN AW-2011 Equiv. Clear Anodize ALSFB	6		-	-	-
	7		-	-	-
	8			-	-
	10			-	-
	12			-	-
	13			-	-
	14				-
	17				-
	19				-
	24				-
	27				
	30				
	32				

L Dimension, Thread Dia. Configurable

Part Number Type	B	Min. L ~ 200	L200.5~400	L400.5~600	L600.5~800
EN 1.0038 Equiv. NLSBF	5		-	-	-
	6		-	-	-
	7		-	-	-
	8			-	-
	10			-	-
	12			-	-
	13			-	-
	14				-
	17				-
	19				-
	24				-
	27				
	30				
	32				
EN 1.0038 Equiv. Black Oxide LSBF	5		-	-	-
	6		-	-	-
	7		-	-	-
	8			-	-
	10			-	-
	12			-	-
	13			-	-
	14				-
	17				-
	19				-
	24				-
	27				
	30				
	32				

Part Number Type	B	Min. L ~ 200	L200.5~400	L400.5~600	L600.5~800
EN 1.0038 Equiv. Electroless Nickel Plating PLSBF	5		-	-	-
	6		-	-	-
	7		-	-	-
	8			-	-
	10			-	-
	12			-	-
	13			-	-
	14				-
	17				-
	19				-
	24				-
	27				
	30				
	32				
EN 1.0038 Equiv. Trivalent Chromate BLSBF	5		-	-	-
	6		-	-	-
	7		-	-	-
	8			-	-
	10			-	-
	12			-	-
	13			-	-
	14				-
	17				-
	19				-
	24				-
	27				
	30				
	32				

Part Number Type	B	Min. L ~ 200	L200.5~400	L400.5~600	L600.5~800
EN 1.4301 Equiv. SLSBF	5		-	-	-
	6		-	-	-
	7		-	-	-
	8			-	-
	10			-	-
	12			-	-
	13			-	-
	14				-
	17				-
	19				-
	24				-
	27				
	30				
	32				
EN AW-2011 Equiv. Clear Anodize ALSBF	6		-	-	-
	7		-	-	-
	8			-	-
	10			-	-
	12			-	-
	13			-	-
	14				-
	17				-
	19				-
	24				-
	27				
	30				
	32				

Example

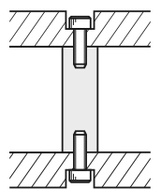

Hex Posts

One End Threaded One End Tapped

■One End Threaded One End Tapped

RoHS

Type			Material	Surface Treatment
L Dimension Selectable	L Dimension Configurable	L Dimension, Thread Dia. Configurable		
-	NLSBWF	NLSBG	*EN 1.0038 Equiv.	-
LSBWRK	LSBWF	LSBG		Black Oxide
PLSBWRK	PLSBWF	PLSBG		Electroless Nickel Plating
-	BLSBWF	BLSBG		Trivalent Chromate (Black)
SLSBWRK	SLSBWF	SLSBG	EN 1.4301 Equiv.	-

*For L dimension selectable products, steel for general structure is used.

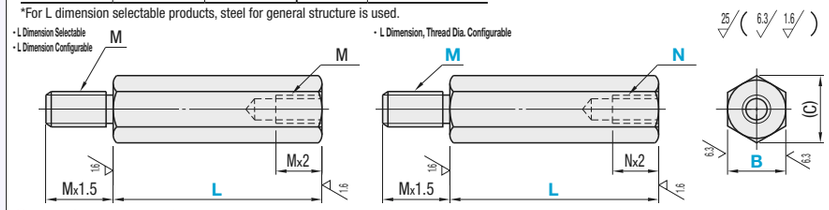

For steel for general structure/EN 1.0038 Equiv., anti-rust oil is provided. Trivalent Chromate (Black) may not always be fully deposited on internal tapped threads.

■L Dimension Selectable

Part Number Type	B	L Selection	M (Coarse)	(C)
General Structural Steel LSBWRK PLSBWRK EN 1.4301 Equiv. SLSBWRK	6	15 20 25 30 35 40 45 50	3	6.9
	7	20 25 30 35 40 45 50 60 70 80 90 100 110 120 130 140 150	4	8.1
	8	20 25 30 35 40 45 50 60 70 80 90 100 110 120 130 140 150 200	5	9.2
	10	25 30 35 40 45 50 60 70 80 90 100 110 120 130 140 150 200	6	11.5
	12	25 30 35 40 45 50 60 70 80 90 100 110 120 130 140 150 200	6	13.9
	13	30 35 40 45 50 60 70 80 90 100 110 120 130 140 150 200	8	15.0
	14	35 40 45 50 60 70 80 90 100 110 120 130 140 150 200	8	16.2
	17	40 45 50 60 70 80 90 100 110 120 130 140 150 200	10	19.6
	19	50 60 70 80 90 100 110 120 130 140 150 200	12	21.9

■L Dimension Configurable

Part Number Type	B	L 0.5mm Increment	M (Coarse)	(C)
EN 1.0038 Equiv. NLSBWF LSBWF PLSBWF BLSBWF EN 1.4301 Equiv. SLSBWF	5	8~50	2.6	5.8
	6	15~50	3	6.9
	7	20~150	4	8.1
	8	20~250	5	9.2
	10	25~350	6	11.5
	12	25~400	6	13.9
	13	30~400	8	15.0
	14	30~500	8	16.2
	17	35~500	10	19.6
	19	45~500	12	21.9
	24	55~600	16	27.7
	27	65~700	20	31.2
	30	65~800	20	34.6
	32	80~800	24	36.9

■L Dimension, Thread Dia. Configurable

Part Number Type	B	L 0.5mm Increment	M (Coarse) / N (Coarse) Selection	(C)
EN 1.0038 Equiv. NLSBG LSBG PLSBG BLSBG EN 1.4301 Equiv. SLSBG	5	8~50	2 2.6	5.8
	6	15~50	3 4	6.9
	7	20~150	3 4	8.1
	8	20~250	3 4 5	9.2
	10	25~350	4 5 6	11.5
	12	25~400	4 5 6 8	13.9
	13	30~400	4 5 6 8	15.0
	14	35~500	4 5 6 8 10	16.2
	17	35~500	5 6 8 10	19.6
	19	45~500	5 6 8 10 12	21.9
	24	55~600	6 8 10 12 16	27.7
	27	65~700	6 8 10 12 16 20	31.2
	30	80~800	6 8 10 12 16 20 24	34.6
	32	80~800	6 8 10 12 16 20 24	36.9

L≥Nx3+2

Ordering Example

Part Number - L - M - N

(L Dimension Selectable) LSBWRK10 - 40
(L Dimension Configurable) LSBWF12 - 300
(L Dimension & Thread Dia. Configurable) LSBG30 - 700 - M20 - N24

Alterations

Part Number - L - M - N - (LKC, MLC)

LSBWF6 - 30 - LKC
LSBG30 - 700 - M20 - N24 - LKC-MLC20

L Dimension Tolerance

L8~300	±0.1
L300.5~600	±0.3
L600.5~800	±0.4

However, when L≤200, and when order volume at one time is less than 10 pcs., since the processing is done simultaneously, the difference of L dimension is within ±0.02.

Except L Dimension Selectable

Example

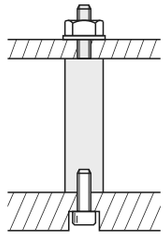

Applicable to L Dimension Configurable Type and L Dimension & Thread Dia. Configurable Type.

Alterations	Code	Spec.
L Dimension Tolerance 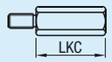	LKC	L Dimension tolerances are as follows: Ordering Code LKC L: 8~300 — L Tolerance: ±0.05 L: 300.5~600 — L Tolerance: ±0.10 L: 600.5~800 — L Tolerance: ±0.15
Thread Length 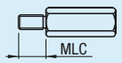	MLC	Changes the thread length. Not applicable to B=5. MLC=0.1mm Increment Mx1≤MLC<Mx1.5 Ordering Code MLC10

■L Dimension Selectable

Part Number Type	B	Min. L ~ 50	L60~100	L110~150	L200
General Structural Steel Black Oxide LSBWRK	6		-	-	-
	7				-
	8				
	10				
	12				
	13				
	14				
	17				
	19				

Part Number Type	B	Min. L ~ 50	L60~100	L110~150	L200
General Structural Steel Electroless Nickel Plating PLSBWRK	6		-	-	-
	7				-
	8				
	10				
	12				
	13				
	14				
	17				
	19				

Part Number Type	B	Min. L ~ 50	L60~100	L110~150	L200
EN 1.4301 Equiv. SLSBWRK	6		-	-	-
	7				-
	8				
	10				
	12				
	13				
	14				
	17				
	19				

■L Dimension Configurable

Part Number Type	B	Min. L ~ 200	L200.5~400	L400.5~600	L600.5~800
EN 1.0038 Equiv. NLSBWF	5		-	-	-
	6		-	-	-
	7		-	-	-
	8			-	-
	10			-	-
	12			-	-
	13			-	-
	14				-
	17				-
	19				-
	24				-
	27				
	30				
	32				
EN 1.0038 Equiv. Black Oxide LSBWF	5		-	-	-
	6		-	-	-
	7		-	-	-
	8			-	-
	10			-	-
	12			-	-
	13			-	-
	14				-
	17				-
	19				-
	24				-
	27				
	30				
	32				

Part Number Type	B	Min. L ~ 200	L200.5~400	L400.5~600	L600.5~800
EN 1.0038 Equiv. Electroless Nickel Plating PLSBWF	5		-	-	-
	6		-	-	-
	7		-	-	-
	8			-	-
	10			-	-
	12			-	-
	13			-	-
	14				-
	17				-
	19				-
	24				-
	27				
	30				
	32				
EN 1.0038 Equiv. Trivalent Chromate BLSBWF	5		-	-	-
	6		-	-	-
	7		-	-	-
	8			-	-
	10			-	-
	12			-	-
	13			-	-
	14				-
	17				-
	19				-
	24				-
	27				
	30				
	32				

Part Number Type	B	Min. L ~ 200	L200.5~400	L400.5~600	L600.5~800
EN 1.4301 Equiv. SLSBWF	5		-	-	-
	6		-	-	-
	7		-	-	-
	8			-	-
	10			-	-
	12			-	-
	13			-	-
	14				-
	17				-
	19				-
	24				-
	27				
	30				
	32				

■L Dimension, Thread Dia. Configurable

Part Number Type	B	Min. L ~ 200	L200.5~400	L400.5~600	L600.5~800
EN 1.0038 Equiv. NLSBG	5		-	-	-
	6		-	-	-
	7		-	-	-
	8			-	-
	10			-	-
	12			-	-
	13			-	-
	14				-
	17				-
	19				-
	24				-
	27				
	30				
	32				
EN 1.0038 Equiv. Black Oxide LSBG	5		-	-	-
	6		-	-	-
	7		-	-	-
	8			-	-
	10			-	-
	12			-	-
	13			-	-
	14				-
	17				-
	19				-
	24				-
	27				
	30				
	32				

Part Number Type	B	Min. L ~ 200	L200.5~400	L400.5~600	L600.5~800
EN 1.0038 Equiv. Electroless Nickel Plating PLSBG	5		-	-	-
	6		-	-	-
	7		-	-	-
	8			-	-
	10			-	-
	12			-	-
	13			-	-
	14				-
	17				-
	19				-
	24				-
	27				
	30				
	32				
EN 1.0038 Equiv. Trivalent Chromate BLSBG	5		-	-	-
	6		-	-	-
	7		-	-	-
	8			-	-
	10			-	-
	12			-	-
	13			-	-
	14				-
	17				-
	19				-
	24				-
	27				
	30				
	32				

Part Number Type	B	Min. L ~ 200	L200.5~400	L400.5~600	L600.5~800
EN 1.4301 Equiv. SLSBG	5		-	-	-
	6		-	-	-
	7		-	-	-
	8			-	-
	10			-	-
	12			-	-
	13			-	-
	14				-
	17				-
	19				-
	24				-
	27				
	30				
	32				

Hex Posts

One End Threaded One End Tapped / Both Ends Threaded, Thread Length & Dia. Configurable

■One End Threaded One End Tapped ■Both Ends Threaded Both Ends Threaded and Thread Length and Dia. Configurable

Type			M Material	S Surface Treatment
One End Threaded One End Tapped	Both Ends Threaded	Both Ends Threaded, Thread Length & Dia. Configurable		
NLSBH	NLSBL	NLSBP	EN 1.0038 Equiv.	-
LSBH	LSBL	LSBP		Black Oxide
PLSBH	PLSBL	PLSBP		Electroless Nickel Plating
SLSBH	SLSBL	SLSBP	EN 1.4301 Equiv.	-

• One End Threaded One End Tapped

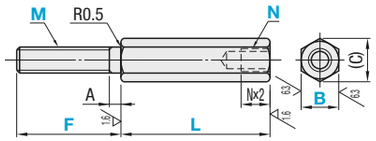

• Both Ends Threaded

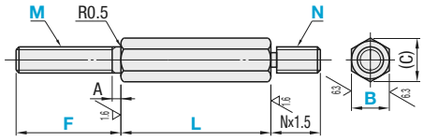

• Both Ends Threaded, Thread Length & Dia. Configurable

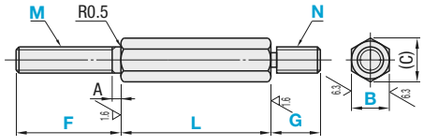

• L Dimension Tolerance

L 8~300	±0.1
L300.5~600	±0.3
L600.5~800	±0.4

Anti-rust Oil is applied on EN 1.0038 Equiv. products.

Part Number Type	B	0.5mm Increment L	F	G	M / N Selection	(C)	A
One End Threaded One End Tapped: EN 1.0038 Equiv. NLSBH LSBH PLSBH; EN 1.4301 Equiv. SLSBH	5	8~50	5~20	5~20	2 2.6	5.8	1.0
	6	15~50	5~30	5~30	3 4	6.9	1.5
	7	20~150	5~30	5~30	3 4	8.1	1.5
	8	20~250	8~40	8~40	4 5	9.2	1.6
Both Ends Threaded: EN 1.0038 Equiv. NLSBL LSBL PLSBL; EN 1.4301 Equiv. SLSBL	10	25~350	8~42	8~42	4 5 6	11.5	2.0
	12	25~400	10~55	10~55	5 6 8	13.9	2.5
	13	30~400	10~55	10~55	5 6 8	15.0	2.5
Both Ends Threaded, Thread Length & Dia. Configurable: EN 1.0038 Equiv. NLSBP LSBP PLSBP; EN 1.4301 Equiv. SLSBP	14	35~500	12~60	12~60	6 8 10	16.2	3.0
	17	35~500	12~60	12~60	6 8 10	19.6	3.0
	19	45~500	15~75	15~75	8 10 12	21.9	3.5
	24	55~600	20~80	20~80	10 12 16	27.7	4.0
	27	65~700	25~90	25~90	12 16 20	31.2	5.0
	30	80~800	30~100	30~100	16 20 24	34.6	6.0
	32	80~800	30~100	30~100	16 20 24	36.9	6.0

L≥Nx3+2 only for One End Threaded One End Tapped Type.

Ordering Example

Part Number	- L -	F -	G -	M -	N
LSBH10	- 200 -	F40		- M5 -	N4
PLSBP10	- 200 -	F40 -	G35 -	M5 -	N4
SLSBP30	- 750 -	F35 -	G40 -	M20 -	N24

Example

One End Threaded One End Tapped

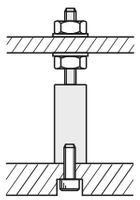

Both Ends Threaded

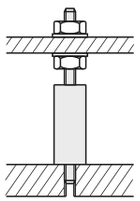

Alterations

Part Number	- L -	F -	G -	M -	N -	(FC)
LSBH10	- 200 -	F40		- M5 -	N4 -	FC
SLSBP30	- 750 -	F35 -	G40 -	M20 -	N24 -	FC

Alterations	Code	Spec.
Undercut 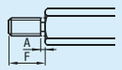	FC	Adds a relief to A Dimension. Ordering Code FC

■One End Threaded One End Tapped

Part Number Type	B	Min. L ~ 200	L200.5~400	L400.5~600	L600.5~800
EN 1.0038 Equiv. NLSBH	5		-	-	-
	6		-	-	-
	7		-	-	-
	8			-	-
	10			-	-
	12			-	-
	13			-	-
	14				-
	17				-
	19				-
	24				-
	27				
	30				
	32				
EN 1.0038 Equiv. Black Oxide LSBH	5		-	-	-
	6		-	-	-
	7		-	-	-
	8			-	-
	10			-	-
	12			-	-
	13			-	-
	14				-
	17				-
	19				-
	24				-
	27				
	30				
	32				
EN 1.0038 Equiv. Electroless Nickel Plating PLSBH	5		-	-	-
	6		-	-	-
	7		-	-	-
	8			-	-
	10			-	-
	12			-	-
	13			-	-
	14				-
	17				-
	19				-
	24				-
	27				
	30				
	32				
EN 1.4301 Equiv. SLSBH	5		-	-	-
	6		-	-	-
	7		-	-	-
	8			-	-
	10			-	-
	12			-	-
	13			-	-
	14				-
	17				-
	19				-
	24				-
	27				
	30				
	32				

■Both Ends Threaded

Part Number Type	B	Min. L ~ 200	L200.5~400	L400.5~600	L600.5~800
EN 1.0038 Equiv. NLSBL	5		-	-	-
	6		-	-	-
	7		-	-	-
	8			-	-
	10			-	-
	12			-	-
	13			-	-
	14				-
	17				-
	19				-
	24				-
	27				
	30				
	32				
EN 1.0038 Equiv. Black Oxide LSBL	5		-	-	-
	6		-	-	-
	7		-	-	-
	8			-	-
	10			-	-
	12			-	-
	13			-	-
	14				-
	17				-
	19				-
	24				-
	27				
	30				
	32				
EN 1.0038 Equiv. Electroless Nickel Plating PLSBL	5		-	-	-
	6		-	-	-
	7		-	-	-
	8			-	-
	10			-	-
	12			-	-
	13			-	-
	14				-
	17				-
	19				-
	24				-
	27				
	30				
	32				
EN 1.4301 Equiv. SLSBL	5		-	-	-
	6		-	-	-
	7		-	-	-
	8			-	-
	10			-	-
	12			-	-
	13			-	-
	14				-
	17				-
	19				-
	24				-
	27				
	30				
	32				

■Both Ends Threaded, Thread Length & Dia. Configurable

Part Number Type	B	Min. L ~ 200	L200.5~400	L400.5~600	L600.5~800
EN 1.0038 Equiv. NLSBP	5		-	-	-
	6		-	-	-
	7		-	-	-
	8			-	-
	10			-	-
	12			-	-
	13			-	-
	14				-
	17				-
	19				-
	24				-
	27				
	30				
	32				
EN 1.0038 Equiv. Black Oxide LSBP	5		-	-	-
	6		-	-	-
	7		-	-	-
	8			-	-
	10			-	-
	12			-	-
	13			-	-
	14				-
	17				-
	19				-
	24				-
	27				
	30				
	32				
EN 1.0038 Equiv. Electroless Nickel Plating PLSBP	5		-	-	-
	6		-	-	-
	7		-	-	-
	8			-	-
	10			-	-
	12			-	-
	13			-	-
	14				-
	17				-
	19				-
	24				-
	27				
	30				
	32				
EN 1.4301 Equiv. SLSBP	5		-	-	-
	6		-	-	-
	7		-	-	-
	8			-	-
	10			-	-
	12			-	-
	13			-	-
	14				-
	17				-
	19				-
	24				-
	27				
	30				
	32				

Hex Posts with Pilot

Pilot Selectable / Configurable

Hex Posts with Pilot

Type						M Material	S Surface Treatment
Both Ends Tapped		One End Threaded One End Tapped		Both Ends Threaded			
Pilot Selectable	Pilot Configurable	Pilot Selectable	Pilot Configurable	Pilot Selectable	Pilot Configurable		
NLSBJ	NLSBJF	NLSBK	NLSBKF	NLSBM	NLSBMF	EN 1.0038 Equiv.	-
LSBJ	LSBJF	LSBK	LSBKF	LSBM	LSBMF		Black Oxide
PLSBJ	PLSBJF	PLSBK	PLSBKF	PLSBM	PLSBMF		Electroless Nickel Plating
SLSBJ	SLSBJF	SLSBK	SLSBKF	SLSBM	SLSBMF	EN 1.4301 Equiv.	-

*C0.2~0.5 at the corner

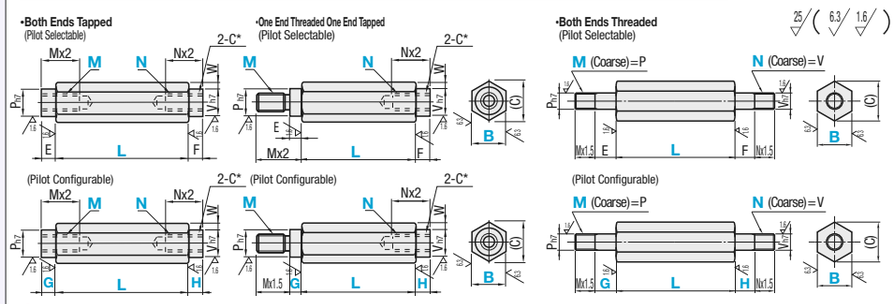

L+E(G)+F(H)≥Mx2+Nx2

Anti-rust Oil is applied on EN 1.0038 Equiv. products.

RoHS

Both Ends Tapped

Part Number Type	B	L 0.5mm Increment	M (Coarse) / N (Coarse) Selection	G 1mm Increment (Pilot Configurable Only)	H 1mm Increment (Pilot Configurable Only)	E	F	P	V	W	(C)
Pilot Selectable EN 1.0038 Equiv. NLSBJ LSBJ PLSBJ / Pilot Configurable EN 1.0038 Equiv. NLSBJF LSBJF PLSBJF	8	15~250	3 4	2~ 4	2~ 4	4	4	6	6	1	9.2
	10	15~350	4 5	2~ 5	2~ 5	5	5	8	8	1	11.5
	12	20~400	5 6	2~ 6	2~ 6	6	6	10	10	1	13.9
	13	20~400	5 6	2~ 6	2~ 6	6	6	10	10	1.5	15
	14	25~500	6 8	2~ 8	2~ 8	8	8	12	12	1	16.2
	17	25~500	6 8	2~ 8	2~ 8	8	8	12	12	2.5	19.6
	19	40~500	6 8 10 12	2~10	2~10	10	10	16	16	1.5	21.9
	24	50~600	6 8 10 12 16	2~12	2~12	12	12	20	20	2	27.7
EN 1.4301 Equiv. SLSBJ / EN 1.4301 Equiv. SLSBJF	27	50~700	6 8 10 12 16	2~16	2~16	16	16	24	24	1.5	31.2
	27W							20	20	3.5	
	30	60~800	6 8 10 12 16 20	2~16	2~16	16	16	28	28	1	34.6
	30W							24	24	3	
	32	60~800	6 8 10 12 16 20	2~20	2~20	20	20	30	30	1	36.9
	32W							24	24	4	

One End Threaded One End Tapped

Part Number Type	B	L 0.5mm Increment	M (Coarse) / N (Coarse) Selection	G 1mm Increment (Pilot Configurable Only)	H 1mm Increment (Pilot Configurable Only)	E	F	P	V	W	(C)
Pilot Selectable EN 1.0038 Equiv. NLSBK LSBK PLSBK / Pilot Configurable EN 1.0038 Equiv. NLSBKF LSBKF PLSBKF	8	20~250	3 4	2~ 4	2~ 4	2	4	6	6	1	9.2
	10	20~350	4 5	2~ 5	2~ 5	2	5	8	8	1	11.5
	12	25~400	5 6	2~ 6	2~ 6	3	6	10	10	1	13.9
	13	25~400	5 6	2~ 6	2~ 6	3	6	10	10	1.5	15
	14	30~500	6 8	2~ 8	2~ 8	4	8	12	12	1	16.2
	17	30~500	6 8	2~ 8	2~ 8	4	8	12	12	2	19.6
	19	45~500	6 8 10 12	2~10	2~10	5	10	16	16	1.5	21.9
	24	55~600	6 8 10 12 16	2~12	2~12	6	12	20	20	2.5	27.7
EN 1.4301 Equiv. SLSBK / EN 1.4301 Equiv. SLSBKF	27	55~700	6 8 10 12 16	2~16	2~16	7	16	24	24	1.5	31.2
	27W							20	20	3.5	
	30	65~800	6 8 10 12 16 20	2~16	2~16	8	16	28	28	1	34.6
	30W							24	24	3	
	32	65~800	6 8 10 12 16 20	2~20	2~20	8	20	30	30	1	36.9
	32W							24	24	4	

Both Ends Threaded

Part Number Type	B	L 0.5mm Increment	M (Coarse) / N (Coarse) Selection	G 1mm Increment (Pilot Configurable Only)	H 1mm Increment (Pilot Configurable Only)	E	F	(C)
Pilot Selectable EN 1.0038 Equiv. NLSBM LSBM PLSBM / Pilot Configurable EN 1.0038 Equiv. NLSBMF LSBMF PLSBMF	8	20~250	3 4 5	2~ 4	2~ 4	4	4	9.2
	10	20~350	4 5 6	2~ 5	2~ 5	5	5	11.5
	12	25~400	5 6 8	2~ 6	2~ 6	6	6	13.9
	13	25~400	5 6 8	2~ 6	2~ 6	6	6	15
	14	30~500	6 8 10	2~ 8	2~ 8	8	8	16.2
	17	30~500	6 8 10	2~ 8	2~ 8	8	8	19.6
	19	45~500	6 8 10 12	2~10	2~10	10	10	21.9
	24	55~600	6 8 10 12 16	2~12	2~12	12	12	27.7
EN 1.4301 Equiv. SLSBM / EN 1.4301 Equiv. SLSBMF	27	55~700	6 8 10 12 16 20	2~16	2~16	16	16	31.2
	30	65~800	6 8 10 12 16 20 24	2~16	2~16	16	16	34.6
	32	65~800	6 8 10 12 16 20 24	2~20	2~20	20	20	36.9

Ordering Example

Part Number - L - M - N - G - H

LSBJ10 - 350 - M5 - N4
PLSBJ27W - 600 - M8 - N8
LSBMF10 - 300 - M5 - N5 - G3 - H2

L Dimension Tolerance	
L 15~300	±0.1
L300.5~600	±0.3
L600.5~800	±0.4

However, when L≤200, and when the order volume at one time is less than 10 pcs., the processing is done simultaneously. The difference in L dimension in one order is within ±0.02.
Except L Dimension Selectable

Example

Both Ends Tapped / One End Threaded One End Tapped / Both Ends Threaded

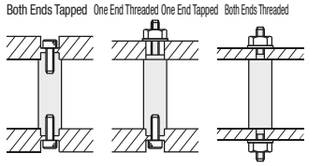

Both Ends Tapped

Part Number Type	B	Min. L ~ 200	L200.5~400	L400.5~600	L600.5~800
EN 1.0038 Equiv. NLSBJ NLSBJF	8			-	-
	10			-	-
	12			-	-
	13			-	-
	14				-
	17				-
	19				-
	24				-
	27				
	27W				
	30				
	30W				
	32				
	32W				
EN 1.0038 Equiv. Black Oxide LSBJ LSBJF	8			-	-
	10			-	-
	12			-	-
	13			-	-
	14				-
	17				-
	19				-
	24				-
	27				
	27W				
	30				
	30W				
	32				
	32W				
EN 1.0038 Equiv. Electroless Nickel Plating PLSBJ PLSBJF	8			-	-
	10			-	-
	12			-	-
	13			-	-
	14				-
	17				-
	19				-
	24				-
	27				
	27W				
	30				
	30W				
	32				
	32W				
EN 1.4301 Equiv. SLSBJ SLSBJF	8			-	-
	10			-	-
	12			-	-
	13			-	-
	14				-
	17				-
	19				-
	24				-
	27				
	27W				
	30				
	30W				
	32				
	32W				

One End Threaded One End Tapped

Part Number Type	B	Min. L ~ 200	L200.5~400	L400.5~600	L600.5~800
EN 1.0038 Equiv. NLSBK NLSBKF	8			-	-
	10			-	-
	12			-	-
	13			-	-
	14				-
	17				-
	19				-
	24				-
	27				
	27W				
	30				
	30W				
	32				
	32W				
EN 1.0038 Equiv. Black Oxide LSBK LSBKF	8			-	-
	10			-	-
	12			-	-
	13			-	-
	14				-
	17				-
	19				-
	24				-
	27				
	27W				
	30				
	30W				
	32				
	32W				
EN 1.0038 Equiv. Electroless Nickel Plating PLSBK PLSBKF	8			-	-
	10			-	-
	12			-	-
	13			-	-
	14				-
	17				-
	19				-
	24				-
	27				
	27W				
	30				
	30W				
	32				
	32W				
EN 1.4301 Equiv. SLSBK SLSBKF	8			-	-
	10			-	-
	12			-	-
	13			-	-
	14				-
	17				-
	19				-
	24				-
	27				
	27W				
	30				
	30W				
	32				
	32W				

Both Ends Threaded

Part Number Type	B	Min. L ~ 200	L200.5~400	L400.5~600	L600.5~800
EN 1.0038 Equiv. NLSBM NLSBMF	8			-	-
	10			-	-
	12			-	-
	13			-	-
	14				-
	17				-
	19				-
	24				-
	27				
	30				
	32				
EN 1.0038 Equiv. Black Oxide LSBM LSBMF	8			-	-
	10			-	-
	12			-	-
	13			-	-
	14				-
	17				-
	19				-
	24				-
	27				
	30				
	32				
EN 1.0038 Equiv. Electroless Nickel Plating PLSBM PLSBMF	8			-	-
	10			-	-
	12			-	-
	13			-	-
	14				-
	17				-
	19				-
	24				-
	27				
	30				
	32				
EN 1.4301 Equiv. SLSBM SLSBMF	8			-	-
	10			-	-
	12			-	-
	13			-	-
	14				-
	17				-
	19				-
	24				-
	27				
	30				
	32				

Alterations

Part Number - L - M - N - G - H - (LKC, NPC, NVC···etc.)

LSBMF10 - 300 - M5 - N5 - G2 - H3 - MLC5 - NLC5
SLSBJF10 - 117.5 - M5 - N5 - G2 - H4 - NPC

Alterations	Code	Spec.
L Dimension Tolerance 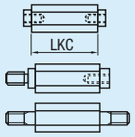	LKC	L Dimension tolerances are as follows: Ordering Code LKC L / L Tolerance 15~300 / ±0.05 300.5~600 / ±0.10 600.5~800 / ±0.15
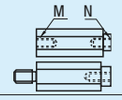	NPC	No machining for P pilot at M thread end. Ordering Code NPC ⊗Not applicable to Both Ends Threaded Type. Specify G2 for Pilot Configurable Dimension. Note that the actual G dimension becomes 0, and the specified dimension is applied to L dimension.
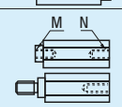	NVC	No machining for V pilot at N thread end. Ordering Code NVC ⊗Not applicable to Both Ends Threaded Type. Specify the Pilot Configurable Type with H2. Note that the actual H dimension becomes 0, and the specified dimension is applied to L dimension.

Alterations	Code	Spec.
Thread Length 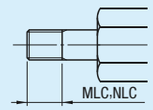	MLC NLC	Changes the thread length of M and N threads. Specify in 0.1mm Increment for MLC and NLC Ordering Code MLC10 Mx1≤MLC<Mx1.5 Nx1≤NLC<Nx1.5 Applicable to Both Ends Threaded Type.
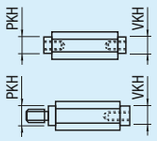	PKH VKH	Pilot diameter can be specified. 1mm Increment Ordering Code PKH8 VKH15 B / PKH, VKH: 10 / 7; 12 / 8, 9; 13 / 8, 9; 14 / 11; 17 / 11 B / PKH, VKH: 19 / 15; 24 / 19; 27, 27W / 19~23; 30, 30W / 24~27; 32, 32W / 24~29 ⊗Not applicable to B=8 ⊗Not applicable to Both Ends Threaded Type.

Hex Posts / Attachment Blocks for Hex Posts

One End Tapped / One End Threaded

Type: One End Tapped	Type: One End Threaded	Material	Surface Treatment
NLMN	NLON	EN 1.0038 Equiv.	-
LSMN	LSON		Black Oxide
PLMN	PLON		Electroless Nickel Plating
SLMN	SLON	EN 1.4301 Equiv.	-

Anti-rust Oil is applied on EN 1.0038 Equiv. products.

• One End Tapped

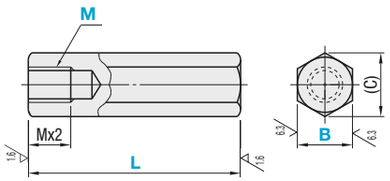

• One End Threaded

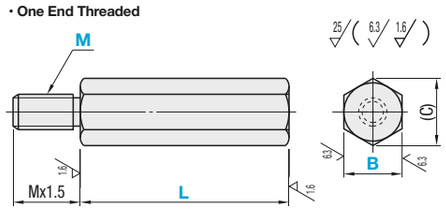

Part Number: Type	B	L 0.5mm Increment	M (Coarse) Selection	(C)
One End Tapped EN 1.0038 Equiv. NLMN LSMN PLMN; One End Threaded EN 1.0038 Equiv. NLON LSON PLON; EN 1.4301 Equiv. SLMN; EN 1.4301 Equiv. SLON	5	8~50	2 2.6	5.8
	6	15~50	3 4	6.9
	7	15~150	3 4	8.1
	8	20~250	3 4 5	9.2
	10	20~350	4 5 6	11.5
	12	25~400	4 5 6 8	13.9
	13	30~400	4 5 6 8	15.0
	14	35~500	4 5 6 8 10	16.2
	17	35~500	5 6 8 10	19.6
	19	45~500	5 6 8 10 12	21.9
	24	65~600	6 8 10 12 16 20	27.7
	27	65~700	6 8 10 12 16 20	31.2
	30	80~800	6 8 10 12 16 20 24	34.6
	32	80~800	6 8 10 12 16 20 24	36.9

Ordering Example

Part Number	-	L	-	M
NLMN6	-	50	-	M3
SLON10	-	300	-	M5

L Dimension Tolerance

L 8~300	±0.1
L300.5~600	±0.3
L600.5~800	±0.4

However, when L≤200, and when order volume at one time is less than 10 pcs., since the processing is done simultaneously, the difference of L dimension is within ±0.02.
Except L Dimension Selectable

Alterations

Part Number	-	L	-	M	-	(LKC, MLC)
NLMN6	-	50	-	M3	-	LKC
SLON10	-	300	-	M5	-	MLC5.5

Alterations	Code	Spec.
L Dimension Tolerance 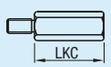	LKC	L Dimension tolerances are as follows: Ordering Code LKC L / L Tolerance: 8~300 ±0.05; 300.5~600 ±0.10; 600.5~800 ±0.15
Thread Length 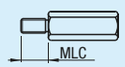	MLC	Changes the thread length. Not applicable to B=5. MLC=0.1mm Increment Mx1≤MLC<Mx1.5 Ordering Code MLC10 Applicable to One End Threaded Type only.

Example

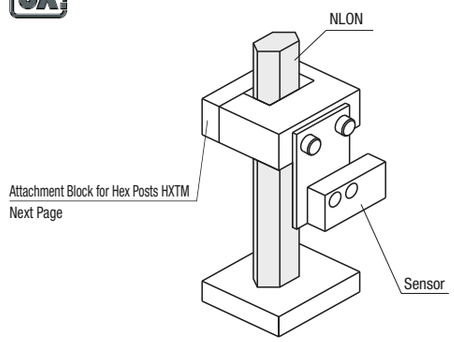

Hex Posts - One End Tapped

Part Number: Type	B	Unit Price: Min. L ~ 200	L200.5~400	L400.5~600	L600.5~800
EN 1.0038 Equiv. NLMN	5		-	-	-
	6		-	-	-
	7		-	-	-
	8			-	-
	10			-	-
	12			-	-
	13			-	-
	14				-
	17				-
	19				-
	24				-
	27				
	30				
	32				
EN 1.0038 Equiv. Black Oxide LSMN	5		-	-	-
	6		-	-	-
	7		-	-	-
	8			-	-
	10			-	-
	12			-	-
	13			-	-
	14				-
	17				-
	19				-
	24				-
	27				
	30				
	32				
EN 1.0038 Equiv. Electroless Nickel Plating PLMN	5		-	-	-
	6		-	-	-
	7		-	-	-
	8			-	-
	10			-	-
	12			-	-
	13			-	-
	14				-
	17				-
	19				-
	24				-
	27				
	30				
	32				
EN 1.4301 Equiv. SLMN	5		-	-	-
	6		-	-	-
	7		-	-	-
	8			-	-
	10			-	-
	12			-	-
	13			-	-
	14				-
	17				-
	19				-
	24				-
	27				
	30				
	32				

Hex Posts - One End Threaded

Part Number: Type	B	Unit Price: Min. L ~ 200	L200.5~400	L400.5~600	L600.5~800
EN 1.0038 Equiv. NLON	5		-	-	-
	6		-	-	-
	7		-	-	-
	8			-	-
	10			-	-
	12			-	-
	13			-	-
	14				-
	17				-
	19				-
	24				-
	27				
	30				
	32				
EN 1.0038 Equiv. Black Oxide LSON	5		-	-	-
	6		-	-	-
	7		-	-	-
	8			-	-
	10			-	-
	12			-	-
	13			-	-
	14				-
	17				-
	19				-
	24				-
	27				
	30				
	32				
EN 1.0038 Equiv. Electroless Nickel Plating PLON	5		-	-	-
	6		-	-	-
	7		-	-	-
	8			-	-
	10			-	-
	12			-	-
	13			-	-
	14				-
	17				-
	19				-
	24				-
	27				
	30				
	32				
EN 1.4301 Equiv. SLON	5		-	-	-
	6		-	-	-
	7		-	-	-
	8			-	-
	10			-	-
	12			-	-
	13			-	-
	14				-
	17				-
	19				-
	24				-
	27				
	30				
	32				

Attachment Blocks for Hex Posts

Type: Top Side Tapped	Type: Side Tapped	Material	Surface Treatment	Accessory
HXSM	HXTM	EN 1.0038 Equiv.	Electroless Nickel Plating	Hex Socket Head Cap Screw

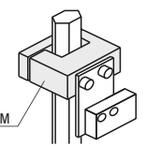

B dimension corresponds to B dim. of Hex Posts.

Top Side Tapped

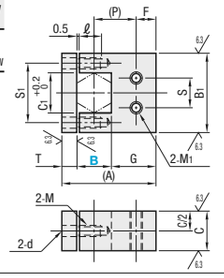

Side Tapped

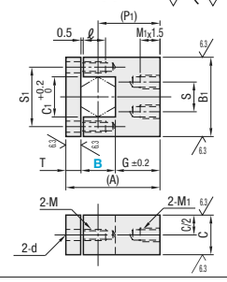

Part Number: Type	B	(P)	(P1)	B1	C	F	G	C1	T	S1	d	M (Coarse)	ℓ	S	M1 (Coarse)	(A)	Unit Price HXSM	Unit Price HXTM	Included Screw
Top Side Tapped HXSM; Side Tapped HXTM	10	11	16	25	12	5	11	11.5	6	18	3.5	M3	6	12	M4	27			SCB3-12 2 pcs.
	12	13	18	32	16		12	13.9		22	4.5	M4	9			30			SCB4-15 2 pcs.
	13						11.5	15.0		23					M5	30.5			
	14	17	25			8	18	16.2		24						38			
	17	20	28	38	22		19.5	19.6	9	28	5.5	M5	11	16	M6	45.5			SCB5-20 2 pcs.
	19						18.5	21.9		29						46.5			

Ordering Example

Part Number
HXSM14

Circular Posts

Both Ends Tapped, Wrench Flats

Both Ends Tapped

RoHS

L Dimension Selectable	Type: L Dimension Configurable: Standard	Wrench Flats	Thread Dia. Configurable	Thread Dia. Configurable, Wrench Flats	M Material	S Surface Treatment
-	NETRF	NETRS	NETF	NETS	*EN 1.0038 Equiv.	-
ETKR	ETKRF	ETKRS	ETKF	ETKS		Black Oxide
PETR	PETRF	PETRS	PETF	PETS		Electroless Nickel Plating
-	BETRF	BETRS	-	BETS		Trivalent Chromate (Black)
SETR	SETRF	SETRS	SETF	SETS	EN 1.4301 Equiv.	-
-	AETRF	AETRS	AETTF	AETTS	EN AW-2017 Equiv.	Clear Anodize

*C0.2~0.5 at the corner

*For L dimension selectable products, steel for general structure is used.

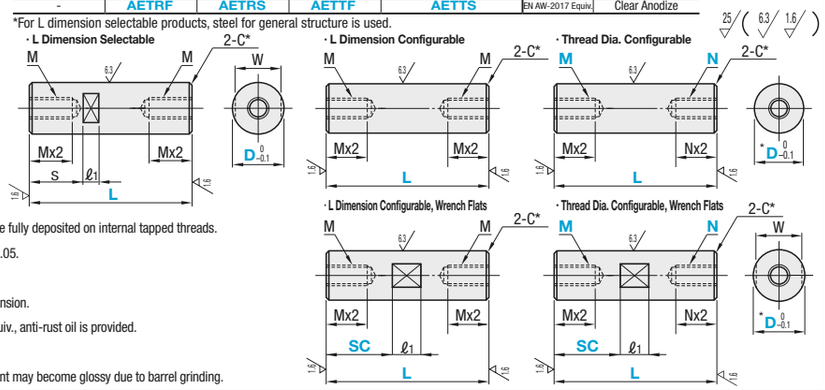

- Trivalent Chromate (Black) may not always be fully deposited on internal tapped threads.
- * D tolerance of trivalent chromate (Black) is ±0.05.
- L≥Mx2+Nx2
- Tapping may cause slight swelling of D dimension.
- For steel for general structure/EN 1.0038 Equiv., anti-rust oil is provided.
- SC≤L-ℓ1
- Wrench flats vicinity with no surface treatment may become glossy due to barrel grinding.

L Dimension Selectable

Part Number Type	D	L Selection	M (Coarse)	S	W	ℓ1
General Structural Steel ETKR PETR	6	15 20 25 30 35 40 45 50	3	3.5	5	8
	8	20 25 30 35 40 45 50 60 70 80 90 100 110 120 130 140 150	4	6	7	
	10	20 25 30 35 40 45 50 60 70 80 90 100 110 120 130 140 150 200	5	6	8	
EN 1.4301 Equiv. SETR	12	25 30 35 40 45 50 60 70 80 90 100 110 120 130 140 150 200	6	7.5	10	10
	15	35 40 45 50 60 70 80 90 100 110 120 130 140 150 200	8	10	13	
	20	40 45 50 60 70 80 90 100 110 120 130 140 150 200	10	15	17	

L Dimension Configurable / L Dimension Configurable, Wrench Flats

Part Number Type		D	L 0.5mm Increment	SC 1 mm Increment With Wrench Flats Only	M (Coarse)	W	ℓ1
L Dimension Configurable EN 1.0038 Equiv. NETRF ETKRF PETRF BETRF	L Dimension Configurable, Wrench Flats EN 1.0038 Equiv. NETRS ETKRS PETRS BETRS	*1 5	8~50	0~42	2.6	4	8
		6	8~50	0~42	3	5	
		8	10~150	0~142	4	7	
		10	15~350	0~342	5	8	
		12	25~400	0~390	6	10	10
		15	25~500	0~490	8	13	
EN 1.4301 Equiv. SETRF	EN 1.4301 Equiv. SETRS	20	30~500	0~490	10	17	
		25	40~600	0~590	12	22	
EN AW-2017 Equiv. AETRF	EN AW-2017 Equiv. AETRS	30	50~700	0~685	16	27	15
		*2 35	50~800	0~785	16	30	
		*2 40	60~900	0~880	20	36	20
		*2 50	75~1000	0~980	24	41	

*1. D=5 is not available for EN AW-2017 Equiv. material. When L≤Mx4, tapped hole goes through. When L≤(Mx2+5)+(Nx2+5), the pilot hole may go through.
*2. D≥35 is applicable only to N□□□□, E□□□□ and P□□□□.

Thread Diameter Configurable / Thread Diameter Configurable, Wrench Flats

Part Number Type		D	L 0.5mm Increment	SC 1 mm Increment With Wrench Flats Only	M / N (Coarse) Selection	W	ℓ1
Thread Dia. Configurable EN 1.0038 Equiv. NETF ETKF PETF	Thread Dia. Configurable, Wrench Flats EN 1.0038 Equiv. NETS ETKS PETS BETS	*1 5	15~50	0~42	2.6 3	4	8
		6	15~50	0~42	3 4	5	
		8	15~150	0~142	3 4 5	7	
		10	20~350	0~342	4 5 6	8	
		12	25~400	0~390	5 6 8	10	10
		15	30~500	0~490	6 8 10	13	
EN 1.4301 Equiv. SETF	EN 1.4301 Equiv. SETS	20	40~500	0~490	6 8 10 12	17	
		25	50~600	0~590	6 8 10 12 16	22	
EN AW-2017 Equiv. AETTF	EN AW-2017 Equiv. AETTS	30	60~700	0~685	6 8 10 12 16 20	27	15
		*2 35	75~800	0~785	8 10 12 16 20 24	30	15
		*2 40	75~900	0~880	10 12 16 20 24	36	20
		*2 50	75~1000	0~980	12 16 20 24	41	20

*1. D=5 is not available for EN AW-2017 Equiv. material. L≥Mx2+Nx2 When SC≤Mx3, W-M≥2 is needed. When L-SC≤Nx3, W-N≥2 is needed.
*2. D≥35 is applicable only to N□□□□, E□□□□ and P□□□□.

L Dimension Tolerance	
L 8~ 300	±0.1
L300.5~ 600	±0.3
L600.5~1000	±0.4

However, when L≤200, and when order volume at one time is less than 10 pcs., since the processing is done simultaneously, the difference of L dimension is within ±0.02.
Except L Dimension Selectable

Ordering Example

Part Number - L - SC - M - N

ETKR10 - 150
ETKRF10 - 150
ETKF20 - 400 - M8 - N10
SETS25 - 500 - SC100 - M10 - N12

L Dimension Selectable

Part Number Type	D	Unit Price Min. L ~ 50	L60~100	L110~150	L200
General Structural Steel Black Oxide ETKR	6		-	-	-
	8				-
	10				
	12				
	15				
	20				

Part Number Type	D	Unit Price Min. L ~ 50	L60~100	L110~150	L200
General Structural Steel Electroless Nickel Plating PETR	6		-	-	-
	8				-
	10				
	12				
	15				
	20				

Part Number Type	D	Unit Price Min. L ~ 50	L60~100	L110~150	L200
EN 1.4301 Equiv. SETR	6		-	-	-
	8				-
	10				
	12				
	15				
	20				

L Dimension Configurable / L Dimension Configurable, Wrench Flats

Part Number Type	D	Unit Price Min. L ~ 200	L200.5~400	L400.5~600	L600.5~800	L800.5~1000
EN 1.0038 Equiv. NETRF NETRS	5		-	-	-	-
	6		-	-	-	-
	8		-	-	-	-
	10			-	-	-
	12			-	-	-
	15				-	-
	20				-	-
	25				-	-
	30					-
	35					-
	40					
	50					
EN 1.0038 Equiv. Black Oxide ETKRF ETKRS	5		-	-	-	-
	6		-	-	-	-
	8		-	-	-	-
	10			-	-	-
	12			-	-	-
	15				-	-
	20				-	-
	25				-	-
	30					-
	35					-
	40					
	50					

Part Number Type	D	Unit Price Min. L ~ 200	L200.5~400	L400.5~600	L600.5~800	L800.5~1000
EN 1.0038 Equiv. Electroless Nickel Plating PETRF PETRS	5		-	-	-	-
	6		-	-	-	-
	8		-	-	-	-
	10			-	-	-
	12			-	-	-
	15				-	-
	20				-	-
	25				-	-
	30					-
	35					-
	40					
	50					
EN 1.0038 Equiv. Trivalent Chromate BETRF BETRS	5		-	-	-	-
	6		-	-	-	-
	8		-	-	-	-
	10			-	-	-
	12			-	-	-
	15				-	-
	20				-	-
	25				-	-
	30					-

Part Number Type	D	Unit Price Min. L ~ 200	L200.5~400	L400.5~600	L600.5~800	L800.5~1000
EN 1.4301 Equiv. SETRF SETRS	5		-	-	-	-
	6		-	-	-	-
	8		-	-	-	-
	10			-	-	-
	12			-	-	-
	15				-	-
	20				-	-
	25				-	-
	30					-
EN AW-2017 Equiv. Clear Anodize AETRF AETRS	6		-	-	-	-
	8		-	-	-	-
	10			-	-	-
	12			-	-	-
	15				-	-
	20				-	-
	25				-	-
	30					-

Thread Diameter Configurable / Thread Diameter Configurable, Wrench Flats

Part Number Type	D	Unit Price Min. L ~ 200	L200.5~400	L400.5~600	L600.5~800	L800.5~1000
EN 1.0038 Equiv. NETF NETS	5		-	-	-	-
	6		-	-	-	-
	8		-	-	-	-
	10			-	-	-
	12			-	-	-
	15				-	-
	20				-	-
	25				-	-
	30					-
	35					-
	40					
	50					
EN 1.0038 Equiv. Black Oxide ETKF ETKS	5		-	-	-	-
	6		-	-	-	-
	8		-	-	-	-
	10			-	-	-
	12			-	-	-
	15				-	-
	20				-	-
	25				-	-
	30					-
	35					-
	40					
	50					

Part Number Type	D	Unit Price Min. L ~ 200	L200.5~400	L400.5~600	L600.5~800	L800.5~1000
EN 1.0038 Equiv. Electroless Nickel Plating PETF PETS	5		-	-	-	-
	6		-	-	-	-
	8		-	-	-	-
	10			-	-	-
	12			-	-	-
	15				-	-
	20				-	-
	25				-	-
	30					-
	35					-
	40					
	50					
EN 1.0038 Equiv. Trivalent Chromate BETS	5		-	-	-	-
	6		-	-	-	-
	8		-	-	-	-
	10			-	-	-
	12			-	-	-
	15				-	-
	20				-	-
	25				-	-
	30					-

Part Number Type	D	Unit Price Min. L ~ 200	L200.5~400	L400.5~600	L600.5~800	L800.5~1000
EN 1.4301 Equiv. SETF SETS	5		-	-	-	-
	6		-	-	-	-
	8		-	-	-	-
	10			-	-	-
	12			-	-	-
	15				-	-
	20				-	-
	25				-	-
	30					-
EN AW-2017 Equiv. Clear Anodize AETTF AETTS	6		-	-	-	-
	8		-	-	-	-
	10			-	-	-
	12			-	-	-
	15				-	-
	20				-	-
	25				-	-
	30					-

Alterations

Part Number - L - SC - M - N - (LKC, HL)

ETKRF10 - 150 - LKC
ETKF20 - 400 - M8 - N10 - LKC
SETS25 - 500 - SC100 - M10 - N12 - HL300

Alterations	Code	Spec.
L Dimension Tolerance 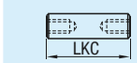	LKC	L Dimension tolerances are as follows: Not Applicable to L Dimension Selectable Ordering Code LKC L / L Tolerance: 8~300 ±0.05; 300.5~600 ±0.10; 600.5~1000 ±0.15
Through Hole for Hex Wrench 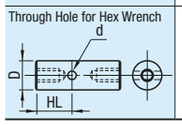	HL	HL=1mm Increment d/2+5≤HL≤L-(d/2+5) Applicable to 8≤D≤30 only Ordering Code HL10 Not Applicable to L Dimension Selectable

D	d	Hex Wrench Width	D	d	Hex Wrench Width
8	2.5	2	20	5.8	5
10	3	2.5	25	6.9	6
12	3.5	3	30	9.2	8
15	4.6	4			

Example

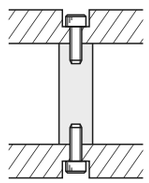

Circular Posts

One End Threaded One End Tapped, Wrench Flats

One End Threaded One End Tapped

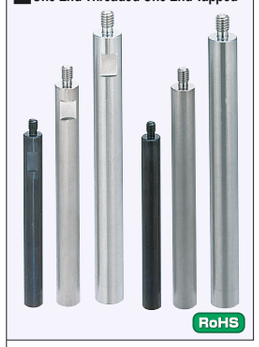

L Dimension Selectable	Type: L Dimension Configurable: Standard	Wrench Flats	Thread Dia. Configurable	Thread Dia. Configurable, Wrench Flats	M Material	S Surface Treatment
-	NETGRF	NETGRS	NETG	NETGS	*EN 1.0038 Equiv.	-
ETKGR	ETKGRF	ETKGRS	ETKG	ETKGS		Black Oxide
PETGR	PETGRF	PETGRS	PETG	PETGS		Electroless Nickel Plating
-	BETGRF	BETGRS	BETG	BETGS		Trivalent Chromate (Black)
SETGR	SETGRF	SETGRS	SETG	SETGS	EN 1.4301 Equiv.	-

*C0.2~0.5 at the corner

*For L dimension selectable products, steel for general structure is used.

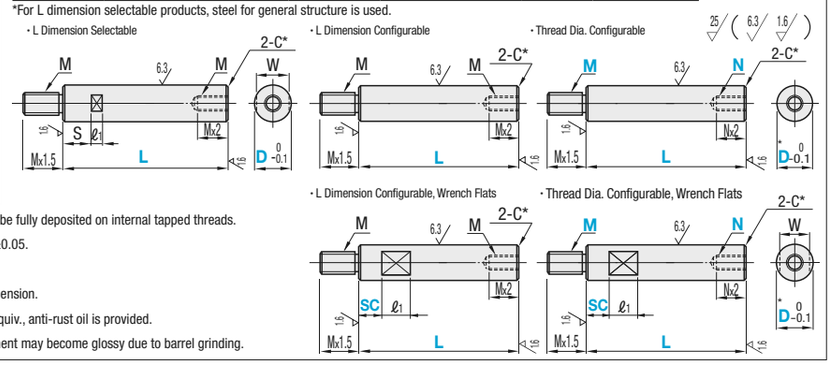

Trivalent Chromate (Black) may not always be fully deposited on internal tapped threads.

* D tolerance of trivalent chromate (Black) is ±0.05.

SC≤L-ℓ1

Tapping may cause slight swelling of D dimension.

For steel for general structure/EN 1.0038 Equiv., anti-rust oil is provided.

Wrench flats vicinity with no surface treatment may become glossy due to barrel grinding.

L Dimension Selectable

Part Number Type	D	L Selection	M (Coarse)	S	W	ℓ1
General Structural Steel ETKGR PETGR	6	15 20 25 30 35 40 45 50	3	3.5	5	8
	8	20 25 30 35 40 45 50 60 70 80 90 100 110 120 130 140 150	4	6	7	
	10	20 25 30 35 40 45 50 60 70 80 90 100 110 120 130 140 150 200	5	6	8	
EN 1.4301 Equiv. SETGR	12	25 30 35 40 45 50 60 70 80 90 100 110 120 130 140 150 200	6	7.5	10	10
	15	30 35 40 45 50 60 70 80 90 100 110 120 130 140 150 200	8	10	13	
	20	40 45 50 60 70 80 90 100 110 120 130 140 150 200	10	15	17	

L Dimension Configurable / L Dimension Configurable, Wrench Flats

Part Number Type		D	L 0.5mm Increment	SC 1 mm Increment With Wrench Flats Only	M (Coarse)	W	ℓ1
L Dimension Configurable EN 1.0038 Equiv. NETGRF ETKGRF PETGRF BETGRF	L Dimension Configurable, Wrench Flats EN 1.0038 Equiv. NETGRS ETKGRS PETGRS BETGRS	5	15~50	0~42	2.6	4	8
		6	15~50	0~42	3	5	
		8	20~150	0~142	4	7	
		10	20~350	0~342	5	8	
EN 1.4301 Equiv. SETGRF	EN 1.4301 Equiv. SETGRS	12	25~400	0~390	6	10	10
		15	30~500	0~490	8	13	
		20	35~500	0~490	10	17	
		25	45~600	0~590	12	22	
		30	55~700	0~685	16	27	15
		*35	55~800	0~785	16	30	15
		*40	65~900	0~880	20	36	20
		*50	80~1000	0~980	24	41	20

*D≥35 is applicable only to N□□□□□, E□□□□□ and P□□□□□.

Thread Diameter Configurable / Thread Diameter Configurable, Wrench Flats

Part Number Type		D	L 0.5mm Increment	SC 1 mm Increment With Wrench Flats Only	M / N (Coarse) Selection	W	ℓ1
Thread Dia. Configurable EN 1.0038 Equiv. NETG ETKG PETG BETG	Thread Dia. Configurable, Wrench Flats EN 1.0038 Equiv. NETGS ETKGS PETGS BETGS	5	15~50	0~42	2.6 3	4	8
		6	15~50	0~42	3 4	5	
		8	20~150	0~142	3 4 5	7	
		10	20~350	0~342	4 5 6	8	
EN 1.4301 Equiv. SETG	EN 1.4301 Equiv. SETGS	12	25~400	0~390	5 6 8	10	10
		15	30~500	0~490	6 8 10	13	
		20	40~500	0~490	6 8 10 12	17	
		25	55~600	0~590	6 8 10 12 16	22	
		30	65~700	0~685	6 8 10 12 16 20	27	15
		*35	80~800	0~785	8 10 12 16 20 24	30	15
		*40	80~900	0~880	10 12 16 20 24	36	20
		*50	80~1000	0~980	12 16 20 24	41	20

*D≥35 is applicable only to N□□□□□, E□□□□□ and P□□□□□. When L-SC≤Nx3, W-N≥2 is required. L≥Nx3+2

L Dimension Tolerance	
L 15~ 300	±0.1
L300.5~ 600	±0.3
L600.5~1000	±0.4

However, when L≤200, and when order volume at one time is less than 10 pcs., since the processing is done simultaneously, the difference of L dimension is within ±0.02.

Except L Dimension Selectable

Ordering Example

Part Number - L - SC - M - N

ETKGR10 - 150
ETKGRF6 - 32
ETKG12 - 250 - M6 - N8
ETKGS20 - 400 - SC100 - M8 - N10

Example

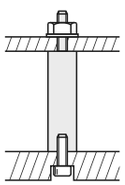

L Dimension Selectable

Part Number Type	D	Min. L ~ 50	L60~100	L110~150	L200
General Structural Steel Black Oxide ETKGR	6		-	-	-
	8				-
	10				
	12				
	15				
	20				

Part Number Type	D	Min. L ~ 50	L60~100	L110~150	L200
General Structural Steel Electroless Nickel Plating PETGR	6		-	-	-
	8				-
	10				
	12				
	15				
	20				

Part Number Type	D	Min. L ~ 50	L60~100	L110~150	L200
EN 1.4301 Equiv. SETGR	6		-	-	-
	8				-
	10				
	12				
	15				
	20				

L Dimension Configurable / L Dimension Configurable, Wrench Flats

Part Number Type	D	Min. L - 200	L200.5~400	L400.5~600	L600.5~800	L800.5~1000
EN 1.0038 Equiv. NETGRF NETGRS	5		-	-	-	-
	6		-	-	-	-
	8		-	-	-	-
	10			-	-	-
	12			-	-	-
	15				-	-
	20				-	-
	25				-	-
	30					-
	35					-
	40					
	50					
EN 1.0038 Equiv. Black Oxide ETKGRF ETKGRS	5		-	-	-	-
	6		-	-	-	-
	8		-	-	-	-
	10			-	-	-
	12			-	-	-
	15				-	-
	20				-	-
	25				-	-
	30					-
	35					-
	40					
	50					

Part Number Type	D	Min. L - 200	L200.5~400	L400.5~600	L600.5~800	L800.5~1000
EN 1.0038 Equiv. Electroless Nickel Plating PETGRF PETGRS	5		-	-	-	-
	6		-	-	-	-
	8		-	-	-	-
	10			-	-	-
	12			-	-	-
	15				-	-
	20				-	-
	25				-	-
	30					-
	35					-
	40					
	50					
EN 1.0038 Equiv. Trivalent Chromate BETGRF BETGRS	5		-	-	-	-
	6		-	-	-	-
	8		-	-	-	-
	10			-	-	-
	12			-	-	-
	15				-	-
	20				-	-
	25				-	-
	30					-

Part Number Type	D	Min. L - 200	L200.5~400	L400.5~600	L600.5~800	L800.5~1000
EN 1.4301 Equiv. SETGRF SETGRS	5		-	-	-	-
	6		-	-	-	-
	8		-	-	-	-
	10			-	-	-
	12			-	-	-
	15				-	-
	20				-	-
	25				-	-
	30					-

Thread Diameter Configurable / Thread Diameter Configurable, Wrench Flats

Part Number Type	D	Min. L - 200	L200.5~400	L400.5~600	L600.5~800	L800.5~1000
EN 1.0038 Equiv. NETG NETGS	5		-	-	-	-
	6		-	-	-	-
	8		-	-	-	-
	10			-	-	-
	12			-	-	-
	15				-	-
	20				-	-
	25				-	-
	30					-
	35					-
	40					
	50					
EN 1.0038 Equiv. Black Oxide ETKG ETKGS	5		-	-	-	-
	6		-	-	-	-
	8		-	-	-	-
	10			-	-	-
	12			-	-	-
	15				-	-
	20				-	-
	25				-	-
	30					-
	35					-
	40					
	50					

Part Number Type	D	Min. L - 200	L200.5~400	L400.5~600	L600.5~800	L800.5~1000
EN 1.0038 Equiv. Electroless Nickel Plating PETG PETGS	5		-	-	-	-
	6		-	-	-	-
	8		-	-	-	-
	10			-	-	-
	12			-	-	-
	15				-	-
	20				-	-
	25				-	-
	30					-
	35					-
	40					
	50					
EN 1.0038 Equiv. Trivalent Chromate BETG BETGS	5		-	-	-	-
	6		-	-	-	-
	8		-	-	-	-
	10			-	-	-
	12			-	-	-
	15				-	-
	20				-	-
	25				-	-
	30					-

Part Number Type	D	Min. L - 200	L200.5~400	L400.5~600	L600.5~800	L800.5~1000
EN 1.4301 Equiv. SETG SETGS	5		-	-	-	-
	6		-	-	-	-
	8		-	-	-	-
	10			-	-	-
	12			-	-	-
	15				-	-
	20				-	-
	25				-	-
	30					-

Alterations

Part Number - L - SC - M - N - (LKC, MLC, HL)

ETKGRF10 - 150 - MLC7.0
ETKG12 - 250 - M6 - N8 - LKC
ETKGS20 - 400 - SC100 - M8 - N10 - LKC-HL10

Alterations	Code	Spec.
L Dimension Tolerance 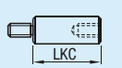	LKC	L Dimension tolerances are as follows: Not Applicable to L Dimension Selectable Ordering Code LKC L / L Tolerance: 15~300 ±0.05; 300.5~600 ±0.10; 600.5~1000 ±0.15
Through Hole for Hex Wrench 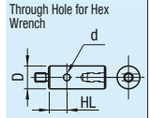	HL	HL=1mm Increment d/2+5≤HL ≤L-(d/2+5) Applicable to 8≤D≤30 only Ordering Code HL10 Not Applicable to L Dimension Selectable D / d / Hex Wrench Width: 8 / 2.5 / 2; 10 / 3 / 2.5; 12 / 3.5 / 3; 15 / 4.6 / 4; 20 / 5.8 / 5; 25 / 6.9 / 6; 30 / 9.2 / 8

Alterations	Code	Spec.
Threaded Length 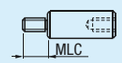	MLC	Changes the threaded length. Not applicable to D=5 Not Applicable to L Dimension Selectable MLC=0.1mm Increment Mx1≤MLC<Mx1.5 Ordering Code MLC10

Circular Posts

One End Threaded One End Tapped / Both Ends Threaded, Thread Length & Dia. Configurable, Wrench Flats

Circular Posts

Type						Material	Surface Treatment
One End Threaded One End Tapped, Thread Length & Dia. Configurable		Both Ends Threaded		Both Ends Threaded, Thread Length & Dia. Configurable			
Standard	Wrench Flats	Standard	Wrench Flats	Standard	Wrench Flats		
NETH	NETHS	NETL	NETLS	-	NETPS	EN 1.0038 Equiv.	-
ETKH	ETKHS	ETKL	ETKLS	-	ETKPS		Black Oxide
PETH	PETHS	PETL	PETLS	PETP	PETPS		Electroless Nickel Plating
SETH	SETHS	SETL	SETLS	SETP	SETPS	EN 1.4301 Equiv.	-

*C0.2~0.5 at the corner

25 (6.3 1.6)

·One End Threaded One End Tapped, Thread Length & Dia. Configurable (Standard)

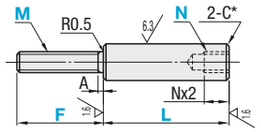

·Both Ends Threaded (Standard)

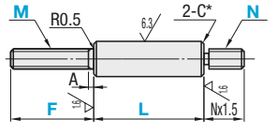

·Both Ends Threaded, Thread Length & Dia. Configurable (Standard)

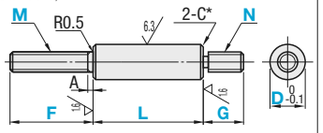

(Wrench Flats)

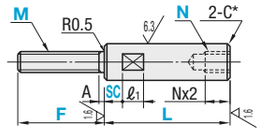

(Wrench Flats)

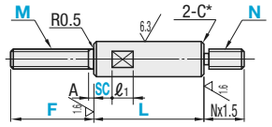

(Wrench Flats)

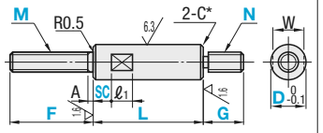

RoHS

Tapping may cause slight swelling of D dimension. Anti-rust Oil is applied on EN 1.0038 Equiv. products. SC≤L-ℓ1

Wrench flats vicinity with no surface treatment may become glossy due to barrel grinding.

One End Threaded One End Tapped / Both Ends Threaded, Thread Length & Dia. Configurable

Part Number Type	D	0.5mm Increment L	F	SC With Wrench Flats Only	M Selection	N Selection	W	ℓ1	A
One End Threaded One End Tapped Thread Length and Dia. Configurable (Standard) (Wrench Flats) EN 1.0038 Equiv. EN 1.0038 Equiv. NETH NETHS ETKH ETKHS PETH PETHS	5	15~50	5~25	0~42	2.6 3	2.6 3	4	8	1.0
	6	15~50	5~30	0~42	3 4	3 4	5		1.0
	8	20~150	8~40	0~142	4 5	4 5	7		1.6
	10	20~350	8~45	0~342	4 5 6	4 5 6	8		2.0
EN 1.4301 Equiv. EN 1.4301 Equiv. SETH SETHS	12	25~400	10~55	0~390	5 6 8	5 6 8	10	10	2.5
	15	30~500	12~60	0~490	6 8 10	6 8 10	13		3.0
Both Ends Threaded (Standard) (Wrench Flats) EN 1.0038 Equiv. EN 1.0038 Equiv. NETL NETLS ETKL ETKLS PETL PETLS	20	40~500	15~75	0~490	6 8 10 12	6 8 10 12	17		3.5
	25	55~600	20~80	0~590	6 8 10 12 16	6 8 10 12 16	22		4.0
	30	65~700	25~90	0~685	6 8 10 12 16 20	6 8 10 12 16 20	27	15	5.0
EN 1.4301 Equiv. EN 1.4301 Equiv. SETL SETLS	*35	80~800	30~100	0~785	8 10 12 16 20 24	8 10 12 16 20 24	30	15	6.0
	*40	80~900	35~110	0~880	10 12 16 20 24	10 12 16 20 24	36	20	6.0
	*50	80~1000	40~120	0~980	12 16 20 24	12 16 20 24	41	20	6.0

* D≥35 is applicable only to N□□□□□, E□□□□□ and P□□□□□. When L-SC≤Nx3, W-N≥2 is required. L≥Nx3+2

Both Ends Threaded, Thread Length & Dia. Configurable

Part Number Type	D	0.5mm Increment L	F	G	SC With Wrench Flats Only	M Selection	N Selection	W	ℓ1	A
(Standard) EN 1.0038 Equiv. PETP	5	15~50	5~25	5~25	0~42	2.6 3	2.6 3	4	8	1.0
	6	15~50	5~30	5~30	0~42	3 4	3 4	5		1.0
	8	20~150	8~40	8~40	0~142	4 5	4 5	7		1.6
	10	20~350	8~45	8~45	0~342	4 5 6	4 5 6	8		2.0
EN 1.4301 Equiv. SETP	12	25~400	10~55	10~55	0~390	5 6 8	5 6 8	10	10	2.5
(Wrench Flats) EN 1.0038 Equiv. NETPS ETKPS PETPS	15	30~500	12~60	12~60	0~490	6 8 10	6 8 10	13		3.0
	20	40~500	15~75	15~75	0~490	6 8 10 12	6 8 10 12	17		3.5
	25	55~600	20~80	20~80	0~590	6 8 10 12 16	6 8 10 12 16	22		4.0
	30	65~700	25~90	25~90	0~685	6 8 10 12 16 20	6 8 10 12 16 20	27	15	5.0
EN 1.4301 Equiv. SETPS	*35	80~800	30~100	30~100	0~785	8 10 12 16 20 24	8 10 12 16 20 24	30	15	6.0
	*40	80~900	35~110	35~110	0~880	10 12 16 20 24	10 12 16 20 24	36	20	6.0
	*50	80~1000	40~120	40~120	0~980	12 16 20 24	12 16 20 24	41	20	6.0

* D≥35 is applicable only to N□□□□□, E□□□□□ and P□□□□□.

Ordering Example

Part Number - L - F - G - SC - M - N

ETKH15 - 210.5 - F40 - M6 - N8
ETKLS12 - 300 - F40 - SC150 - M5 - N8
NETPS12 - 300 - F40 - G20 - SC150 - M8 - N8

L Dimension Tolerance

L 15 ~ 300	±0.1
L300.5~ 600	±0.3
L600.5~1000	±0.4

Example

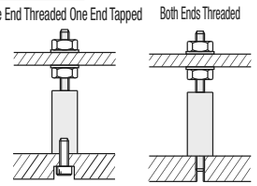

One End Threaded One End Tapped, Thread Length & Dia. Configurable

Part Number Type	D	Min. L ~ 200	L200.5~400	L400.5~600	L600.5~800	L800.5~1000
EN 1.0038 Equiv. NETH	5		-	-	-	-
	6		-	-	-	-
	8		-	-	-	-
	10			-	-	-
	12			-	-	-
	15				-	-
	20				-	-
NETHS	25				-	-
	30					-
	35					-
	40					
	50					
EN 1.0038 Equiv. Black Oxide ETKH	5		-	-	-	-
	6		-	-	-	-
	8		-	-	-	-
	10			-	-	-
	12			-	-	-
	15				-	-
	20				-	-
ETKHS	25				-	-
	30					-
	35					-
	40					
	50					
EN 1.0038 Equiv. Electroless Nickel Plating PETH	5		-	-	-	-
	6		-	-	-	-
	8		-	-	-	-
	10			-	-	-
	12			-	-	-
	15				-	-
	20				-	-
PETHS	25				-	-
	30					-
	35					-
	40					
	50					
EN 1.4301 Equiv. SETH	5		-	-	-	-
	6		-	-	-	-
	8		-	-	-	-
	10			-	-	-
	12			-	-	-
	15				-	-
	20				-	-
SETHS	25				-	-
	30					-

Both Ends Threaded

Part Number Type	D	Min. L ~ 200	L200.5~400	L400.5~600	L600.5~800	L800.5~1000
EN 1.0038 Equiv. NETL	5		-	-	-	-
	6		-	-	-	-
	8		-	-	-	-
	10			-	-	-
	12			-	-	-
	15				-	-
	20				-	-
NETLS	25				-	-
	30					-
	35					-
	40					
	50					
EN 1.0038 Equiv. Black Oxide ETKL	5		-	-	-	-
	6		-	-	-	-
	8		-	-	-	-
	10			-	-	-
	12			-	-	-
	15				-	-
	20				-	-
ETKLS	25				-	-
	30					-
	35					-
	40					
	50					
EN 1.0038 Equiv. Electroless Nickel Plating PETL	5		-	-	-	-
	6		-	-	-	-
	8		-	-	-	-
	10			-	-	-
	12			-	-	-
	15				-	-
	20				-	-
PETLS	25				-	-
	30					-
	35					-
	40					
	50					
EN 1.4301 Equiv. SETL	5		-	-	-	-
	6		-	-	-	-
	8		-	-	-	-
	10			-	-	-
	12			-	-	-
	15				-	-
	20				-	-
SETLS	25				-	-
	30					-

Both Ends Threaded, Thread Length & Dia. Configurable

Part Number Type	D	Min. L ~ 200	L200.5~400	L400.5~600	L600.5~800	L800.5~1000
EN 1.0038 Equiv. NETPS	5		-	-	-	-
	6		-	-	-	-
	8		-	-	-	-
	10			-	-	-
	12			-	-	-
	15				-	-
	20				-	-
	25				-	-
	30					-
	35					-
	40					
	50					
EN 1.0038 Equiv. Black Oxide ETKPS	5		-	-	-	-
	6		-	-	-	-
	8		-	-	-	-
	10			-	-	-
	12			-	-	-
	15				-	-
	20				-	-
	25				-	-
	30					-
	35					-
	40					
	50					
EN 1.0038 Equiv. Electroless Nickel Plating PETP	5		-	-	-	-
	6		-	-	-	-
	8		-	-	-	-
	10			-	-	-
	12			-	-	-
	15				-	-
	20				-	-
	25				-	-
PETPS	30					-
	35					-
	40					
	50					
EN 1.4301 Equiv. SETP	5		-	-	-	-
	6		-	-	-	-
	8		-	-	-	-
	10			-	-	-
	12			-	-	-
	15				-	-
	20				-	-
	25				-	-
SETPS	30					-

Alterations

Part Number - L - F - G - SC - M - N - (FC, HL)

ETKH15 - 210.5 - F40 - M6 - N8 - FC
ETKLS12 - 300 - F40 - SC150 - M5 - N8 - FC
NETPS12 - 300 - F40 - G20 - SC150 - M8 - N8 - HL100

Alteration	Code	Spec.
Undercut 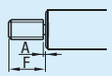	FC	Adds a relief to A Dimension. Ordering Code FC

Alteration	Code	Spec.
Through Hole for Hex Wrench 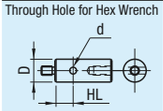	HL	HL=1mm Increment; d/2+5≤HL; ≤L-(d/2+5); Applicable to 8≤D≤30 only; Ordering Code HL10

D	d	Hex Wrench Width
8	2.5	2
10	3	2.5
12	3.5	3
15	4.6	4
20	5.8	5
25	6.9	6
30	9.2	8

Circular Posts with Pilot

Pilot Selectable / Pilot & Wrench Flats Configurable

Circular Posts with Pilot

Type						M Material	S Surface Treatment
Both Ends Tapped		One End Threaded One End Tapped		Both Ends Threaded			
Pilot Selectable	Pilot & Wrench Flats Configurable	Pilot Selectable	Pilot & Wrench Flats Configurable	Pilot Selectable	Pilot & Wrench Flats Configurable		
NETJ	NETJF	NETK	NETKF	NETM	NETMF	EN 1.0038 Equiv.	-
ETKJ	ETKJF	ETKK	ETKKF	ETKM	ETKMF		Black Oxide
PETJ	PETJF	PETK	PETKF	PETM	PETMF		Electroless Nickel Plating
SETJ	SETJF	SETK	SETKF	SETM	SETMF	EN 1.4301 Equiv.	-

*C0.2~0.5 at the corner

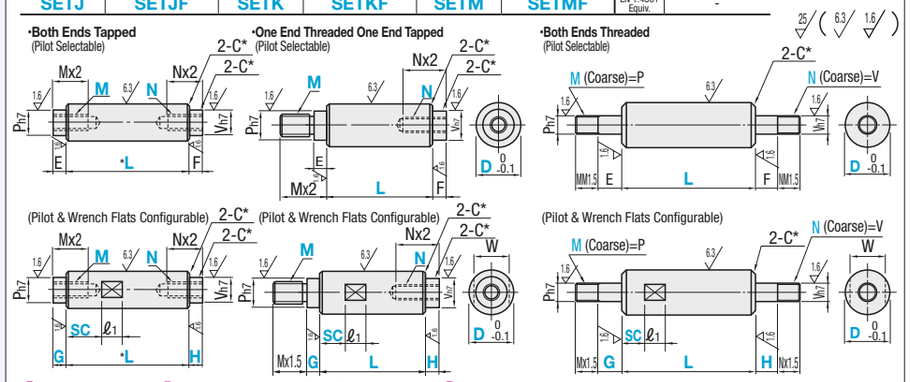

RoHS

Both Ends Tapped

Part Number Type	D	L 1mm Increment	SC 1 mm Increment With Wrench Flats Only	M (Coarse) / N (Coarse) Selection	G 1mm Increment	H 1mm Increment	E	F	P	V	W	ℓ1
Pilot Selectable EN 1.0038 Equiv. NETJ ETKJ PETJ / Pilot & Wrench Flats Configurable EN 1.0038 Equiv. NETJF ETKJF PETJF	8	15~150	0~142	3 4	2~ 4	2~ 4	4	4	6	6	7	8
	10	15~350	0~342	4 5	2~ 5	2~ 5	5	5	8	8	8	
	12	20~400	0~390	5 6	2~ 6	2~ 6	6	6	10	10	10	10
	15	25~500	0~490	6 8	2~ 8	2~ 8	8	8	12	12	13	
	20	40~500	0~490	6 8 10 12	2~10	2~10	10	10	16	16	17	
EN 1.4301 Equiv. SETJ / EN 1.4301 Equiv. SETJF	25	55~600	0~590	6 8 10 12 16	2~12	2~12	12	12	20	20	22	
	30	55~700	0~685	6 8 10 12 16	2~16	2~16	16	16	24	24	27	15

One End Threaded One End Tapped

Part Number Type	D	L 1mm Increment	SC 1 mm Increment With Wrench Flats Only	M (Coarse) / N (Coarse) Selection	G 1mm Increment	H 1mm Increment	E	F	P	V	W	ℓ1
Pilot Selectable EN 1.0038 Equiv. NETK ETKK PETK / Pilot & Wrench Flats Configurable EN 1.0038 Equiv. NETKF ETKKF PETKF	8	20~150	0~142	3 4	2~ 4	2~ 4	2	4	6	6	7	8
	10	20~350	0~342	4 5	2~ 5	2~ 5	2	5	8	8	8	
	12	25~400	0~390	5 6	2~ 6	2~ 6	3	6	10	10	10	10
	15	30~500	0~490	6 8	2~ 8	2~ 8	4	8	12	12	13	
	20	40~500	0~490	6 8 10 12	2~10	2~10	5	10	16	16	17	
EN 1.4301 Equiv. SETK / EN 1.4301 Equiv. SETKF	25	60~600	0~590	6 8 10 12 16	2~12	2~12	6	12	20	20	22	
	30	60~700	0~685	6 8 10 12 16	2~16	2~16	7	16	24	24	27	15

Both Ends Threaded

Part Number Type	D	L 1mm Increment	SC 1mm Increment Wrench Flats only	M (Coarse) / N (Coarse) Selection	G 1mm Increment	H 1mm Increment	E	F	W	ℓ1
Pilot Selectable EN 1.0038 Equiv. NETM ETKM PETM / Pilot & Wrench Flats Configurable EN 1.0038 Equiv. NETMF ETKMF PETMF	8	20~150	0~142	3 4 5	2~ 4	2~ 4	4	4	7	8
	10	20~350	0~342	4 5 6	2~ 5	2~ 5	5	5	8	
	12	25~400	0~390	5 6 8	2~ 6	2~ 6	6	6	10	10
	15	30~500	0~490	6 8 10	2~ 8	2~ 8	8	8	13	
	20	40~500	0~490	6 8 10 12	2~10	2~10	10	10	17	
EN 1.4301 Equiv. SETM / EN 1.4301 Equiv. SETMF	25	60~600	0~590	6 8 10 12 16	2~12	2~12	12	12	22	
	30	60~700	0~685	6 8 10 12 16 20	2~16	2~16	16	16	27	15

Ordering Example

Part Number	-	L	-	SC	-	M	-	N	-	G	-	H
(Pilot Selectable) ETKJ10	-	200			-	M5	-	N5				
(Pilot & Wrench Flats Configurable) ETKJF10	-	200	-	SC150	-	M5	-	N5	-	G2	-	H2

L Dimension Tolerance
L 15~300 ±0.1
L301~600 ±0.3
L601~700 ±0.4
However, when L≤200, and when the order volume at one time is less than 10 pcs., the processing is done simultaneously. The difference in L dimension in one order is within ±0.02.

ex Example

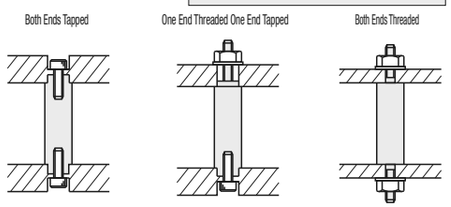

Both Ends Tapped

Part Number Type	D	Unit Price Min. L ~ 200	L201~400	L401~600	L601~700
EN 1.0038 Equiv. NETJ NETJF	8		-	-	-
	10			-	-
	12			-	-
	15				-
	20				-
	25				-
	30				
EN 1.0038 Equiv. Black Oxide ETKJ ETKJF	8		-	-	-
	10			-	-
	12			-	-
	15				-
	20				-
	25				-
	30				
EN 1.0038 Equiv. Electroless Nickel Plating PETJ PETJF	8		-	-	-
	10			-	-
	12			-	-
	15				-
	20				-
	25				-
	30				
EN 1.4301 Equiv. SETJ SETJF	8		-	-	-
	10			-	-
	12			-	-
	15				-
	20				-
	25				-
	30				

One End Threaded One End Tapped

Part Number Type	D	Unit Price Min. L ~ 200	L201~400	L401~600	L601~700
EN 1.0038 Equiv. NETK NETKF	8		-	-	-
	10			-	-
	12			-	-
	15				-
	20				-
	25				-
	30				
EN 1.0038 Equiv. Black Oxide ETKK ETKKF	8		-	-	-
	10			-	-
	12			-	-
	15				-
	20				-
	25				-
	30				
EN 1.0038 Equiv. Electroless Nickel Plating PETK PETKF	8		-	-	-
	10			-	-
	12			-	-
	15				-
	20				-
	25				-
	30				
EN 1.4301 Equiv. SETK SETKF	8		-	-	-
	10			-	-
	12			-	-
	15				-
	20				-
	25				-
	30				

Both Ends Threaded

Part Number Type	D	Unit Price Min. L ~ 200	L201~400	L401~600	L601~700
EN 1.0038 Equiv. NETM NETMF	8		-	-	-
	10			-	-
	12			-	-
	15				-
	20				-
	25				-
	30				
EN 1.0038 Equiv. Black Oxide ETKM ETKMF	8		-	-	-
	10			-	-
	12			-	-
	15				-
	20				-
	25				-
	30				
EN 1.0038 Equiv. Electroless Nickel Plating PETM PETMF	8		-	-	-
	10			-	-
	12			-	-
	15				-
	20				-
	25				-
	30				
EN 1.4301 Equiv. SETM SETMF	8		-	-	-
	10			-	-
	12			-	-
	15				-
	20				-
	25				-
	30				

Alterations

Part Number	-	L	-	SC	-	M	-	N	-	G	-	H	-	(LKC, SC, NPC, NVC···etc.)
ETKM10	-	300			-	M5	-	N5					-	MLC5 - NLC5 - SC150
ETKMF10	-	300	-	SC250	-	M5	-	N5	-	G2	-	H3	-	LKC

Alterations	Code	Spec.
L Dimension Tolerance 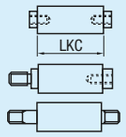	LKC	L Dimension tolerances are as follows: Ordering Code LKC L: 15~300 — L Tolerance ±0.05; 301~600 — ±0.10; 601~700 — ±0.15
Wrench Flats 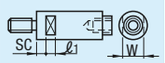	SC	SC=1 mm Increment SC≥0 Ordering Code SC10 Applicable to Pilot Selectable Type only. D — W — ℓ1: 8 — 7 — 8; 10 — 8; 12 — 10; 15 — 13 — 10; 20 — 17; 25 — 22; 30 — 27 — 15
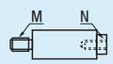	NPC	No machining for P pilot at M thread end. Ordering Code NPC Specify the Pilot Configurable Type with G. Note that the actual G dimension becomes 0, and the specified dimension is applied to L dimension. Not applicable to Both Ends Threaded Type.
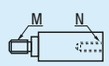	NVC	No machining for V pilot at N thread end. Ordering Code NVC Specify the Pilot Configurable Type with H2. Note that the actual H dimension becomes 0, and the specified dimension is applied to L dimension. Not applicable to Both Ends Threaded Type.

Alterations	Code	Spec.
Thread Length 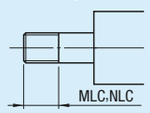	MLC NLC	Changes the thread length of M and N threads. Specify in 0.1mm Increment for MLC and NLC. Ordering Code MLC10 Mx1≤MLC<Mx1.5 Nx1≤NLC<Nx1.5 Applicable to Both Ends Threaded Type.
Through Hole for Hex Wrench 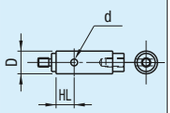	HL	HL=1mm Increment d/2+5≤HL ≤L-(d/2+5) Ordering Code HL10 D — d — Hex Wrench Width: 8 — 2.5 — 2; 10 — 3 — 2.5; 12 — 3.5 — 3; 15 — 4.6 — 4; 20 — 5.8 — 5; 25 — 6.9 — 6; 30 — 9.2 — 8
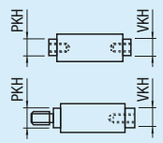	PKH VKH	Pilot diameter can be specified. 1mm Increment Ordering Code PKH8 VKH15 D — PKH, VKH: 10 — 7; 12 — 8, 9; 15 — 10, 11; 20 — 14, 15; 25 — 18, 19; 30 — 18~23 Not applicable to D8. Not applicable to Both Ends Threaded Type.

Circular Posts

One End Tapped / One End Threaded

■One End Tapped ■One End Threaded

Type: One End Tapped	Type: One End Threaded	M Material	S Surface Treatment
NETMN	NETN	EN 1.0038 Equiv.	-
ETKMN	ETKN		Black Oxide
PETMN	PETN		Electroless Nickel Plating
SETMN	SETN	EN 1.4301 Equiv.	-

L Dimension Tolerance	
L 15~ 300	±0.1
L301~ 600	±0.3
L601~1000	±0.4

However, when L≤200, and when the order volume at one time is less than 10 pcs., the processing is done simultaneously. The difference in L dimension in one order is within ±0.02.

*C0.2~0.5 at the corner

• One End Tapped

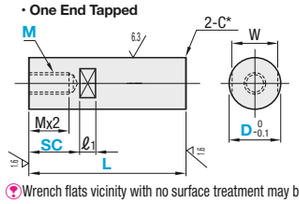

• One End Threaded

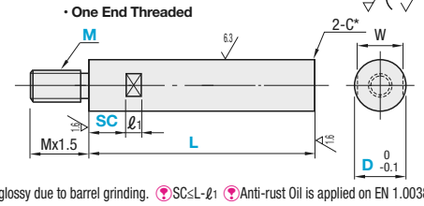

Wrench flats vicinity with no surface treatment may become glossy due to barrel grinding. SC≤L-ℓ1 Anti-rust Oil is applied on EN 1.0038 Equiv. products.

Part Number Type	D	L 1mm Increment	SC 1 mm Increment	M (Coarse) Selection	W	ℓ1
One End Tapped EN 1.0038 Equiv. NETMN ETKMN PETMN	5	15~50	0~42	2.6 3	4	8
	6	15~50	0~42	3 4	5	
	8	20~150	0~142	3 4 5	7	
	10	20~350	0~342	4 5 6	8	
EN 1.4301 Equiv. SETMN	12	25~400	0~390	5 6 8	10	10
	15	35~500	0~490	6 8 10	13	
One End Threaded EN 1.0038 Equiv. NETN ETKN PETN	20	40~500	0~490	6 8 10 12	17	
	25	55~600	0~590	6 8 10 12 16	22	
	30	65~700	0~685	6 8 10 12 16 20	27	15
EN 1.4301 Equiv. SETN	*35	80~800	0~785	8 10 12 16 20	30	15
	*40	80~900	0~880	10 12 16 20 24	36	20
	*50	80~1000	0~980	12 16 20 24	41	20

When SC≤Mx3 for One End Tapped Type, W-M≥2 is required.
* D≥35 is applicable only to N□□□□, E□□□□ and P□□□□.

Ordering Example

Part Number	-	L	-	SC	-	M
NETMN10	-	300	-	SC250	-	M5
SETN20	-	350	-	SC100	-	M10

Alterations

Part Number	-	L	-	SC	-	M	-	(LKC, MLC)
NETN10	-	300	-	SC250	-	M5	-	MLC6

Alteration	Code	Spec.
Threaded Length 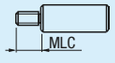	MLC	Changes the threaded length. Not applicable to D=5. MLC=0.1mm Increment Mx1≤MLC<Mx1.5 Ordering Code MLC10 Applicable to One End Threaded Type only.

For LKC, P.2130

■One End Tapped

Part Number Type	D	Unit Price Min. L ~ 200	L201~400	L401~600	L601~800	L801~1000
EN 1.0038 Equiv. NETMN	5		-	-	-	-
	6		-	-	-	-
	8		-	-	-	-
	10			-	-	-
	12			-	-	-
	15				-	-
	20				-	-
	25				-	-
	30					-
	35					-
	40					
	50					
EN 1.0038 Equiv. Black Oxide ETKMN	5		-	-	-	-
	6		-	-	-	-
	8		-	-	-	-
	10			-	-	-
	12			-	-	-
	15				-	-
	20				-	-
	25				-	-
	30					-
	35					-
	40					
	50					
EN 1.0038 Equiv. Electroless Nickel Plating PETMN	5		-	-	-	-
	6		-	-	-	-
	8		-	-	-	-
	10			-	-	-
	12			-	-	-
	15				-	-
	20				-	-
	25				-	-
	30					-
	35					-
	40					
	50					
EN 1.4301 Equiv. SETMN	5		-	-	-	-
	6		-	-	-	-
	8		-	-	-	-
	10			-	-	-
	12			-	-	-
	15				-	-
	20				-	-
	25				-	-
	30					-

■One End Threaded

Part Number Type	D	Unit Price Min. L ~ 200	L201~400	L401~600	L601~800	L801~1000
EN 1.0038 Equiv. NETN	5		-	-	-	-
	6		-	-	-	-
	8		-	-	-	-
	10			-	-	-
	12			-	-	-
	15				-	-
	20				-	-
	25				-	-
	30					-
	35					-
	40					
	50					
EN 1.0038 Equiv. Black Oxide ETKN	5		-	-	-	-
	6		-	-	-	-
	8		-	-	-	-
	10			-	-	-
	12			-	-	-
	15				-	-
	20				-	-
	25				-	-
	30					-
	35					-
	40					
	50					
EN 1.0038 Equiv. Electroless Nickel Plating PETN	5		-	-	-	-
	6		-	-	-	-
	8		-	-	-	-
	10			-	-	-
	12			-	-	-
	15				-	-
	20				-	-
	25				-	-
	30					-
	35					-
	40					
	50					
EN 1.4301 Equiv. SETN	5		-	-	-	-
	6		-	-	-	-
	8		-	-	-	-
	10			-	-	-
	12			-	-	-
	15				-	-
	20				-	-
	25				-	-
	30					-

Plastic Circular Posts

One End Tapped / Both Ends Tapped

Threaded inserts are added to the main body (resin) to strengthen the tapped holes.

■Plastic Circular Posts

Type: One End Tapped	Both Ends Tapped	One End Threaded Insert	Both Ends Threaded Inserts	M Material	Color	Threaded Insert M Material
PHRF	PLRF	PHNRF	PLNRF	Polyacetal	White	EN 1.4301 Equiv.

• One End Tapped, One End Threaded Insert

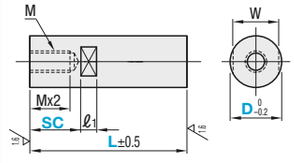

• Both Ends Tapped, Both Ends Threaded Inserts

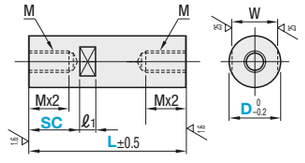

SC≤L-ℓ1 Characteristic Values P.2-953

Part Number Type				D	L 1mm Increment	SC 1 mm Increment	M (Coarse)	W	ℓ1
One End Tapped PHRF	Both Ends Tapped PLRF	One End Threaded Insert PHNRF	Both Ends Threaded Inserts PLNRF	6	20~ 50	0~ 42	M 3	5	8
				8	25~150	0~142	M 4	7	
				10	30~350	0~342	M 5	8	
				12	40~400	0~390	M 6	10	10
				15	50~500	0~490	M 8	13	
				20	60~500	0~490	M10	17	
				25	80~600	0~590	M12	22	
				30	100~700	0~685	M16	27	15

Ordering Example

Part Number	-	L	-	SC
PHRF10	-	300	-	SC200
PLNRF20	-	400	-	SC310

■One End Tapped

Part Number Type	D	Unit Price Min. L ~ 200	L201~400	L401~600	L601~700
PHRF	6		-	-	-
	8		-	-	-
	10			-	-
	12			-	-
	15				-
	20				-
	25				-
	30				

■Both Ends Tapped

Part Number Type	D	Unit Price Min. L ~ 200	L201~400	L401~600	L601~700
PLRF	6		-	-	-
	8		-	-	-
	10			-	-
	12			-	-
	15				-
	20				-
	25				-
	30				

■One End Threaded Insert

Part Number Type	D	Unit Price Min. L ~ 200	L201~400	L401~600	L601~700
PHNRF	6		-	-	-
	8		-	-	-
	10			-	-
	12			-	-
	15				-
	20				-
	25				-
	30				

■Both Ends Threaded Inserts

Part Number Type	D	Unit Price Min. L ~ 200	L201~400	L401~600	L601~700
PLNRF	6		-	-	-
	8		-	-	-
	10			-	-
	12			-	-
	15				-
	20				-
	25				-
	30				

Square Post

Both Ends Tapped / One End Threaded One End Tapped

■Side surfaces wider than those of hex posts are more convenient for mounting objects.

■Square Post

RoHS

L Dimension Tolerance
L 10~300 ±0.1
L301~600 ±0.3
L601~700 ±0.4
However, when L≤200, and when the order volume at one time is less than 10 pcs., the processing is done simultaneously.
The difference in L dimension in one order is within ±0.02.

Type				M Material	S Surface Treatment
Both Ends Tapped		One End Threaded One End Tapped			
L Dimension Configurable	L Dimension, Thread Dia. Configurable	L Dimension Configurable	L Dimension, Thread Dia. Configurable		
NLRFB	NLRBF	-	NLRGF	EN 1.0038 Equiv.	-
LRFB	LRBBF	-	LRBGF		Black Oxide
PLRFB	PLRBF	PLRFG	PLRGF		Electroless Nickel Plating
SLRFB	SLRBF	SLRFG	SLRGF	EN 1.4301 Equiv.	-

■Both Ends Tapped

·L Dimension Configurable

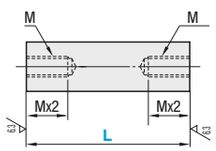

·L Dimension, Thread Dia. Configurable

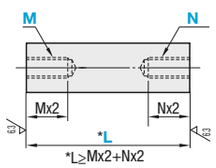

*L≥Mx2+Nx2

■One End Threaded One End Tapped

·L Dimension Configurable

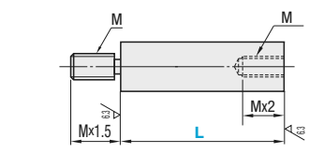

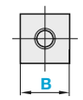

·L Dimension, Thread Dia. Configurable

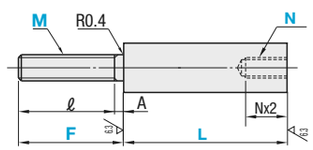

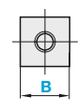

6.3 / (6.3)

Tapping may cause slight swelling of B dimension.
Centering hole may remain on the threaded end.

Anti-rust Oil is applied on EN 1.0038 Equiv. products.

■Both Ends Tapped, L Dimension Configurable

Part Number Type	B	Unit Price Min. L ~ 100	L101~200	L201~300	L301~400
EN 1.0038 Equiv. NLRFB	8			-	-
	10				-
	12				
	15				
	20				
	25				
	30				
EN 1.0038 Equiv. Black Oxide LRFB	8			-	-
	10				-
	12				
	15				
	20				
	25				
	30				
EN 1.0038 Equiv. Electroless Nickel Plating PLRFB	8			-	-
	10				-
	12				
	15				
	20				
	25				
	30				
EN 1.4301 Equiv. SLRFB	8			-	-
	10				-
	12				
	15				
	20				
	25				
	30				

■Both Ends Tapped, L Dimension & Thread Dia. Configurable

Part Number Type	B	Unit Price Min. L ~ 100	L101~200	L201~300	L301~400
EN 1.0038 Equiv. NLRBF	8			-	-
	10				-
	12				
	15				
	20				
	25				
	30				
EN 1.0038 Equiv. Black Oxide LRBBF	8			-	-
	10				-
	12				
	15				
	20				
	25				
	30				
EN 1.0038 Equiv. Electroless Nickel Plating PLRBF	8			-	-
	10				-
	12				
	15				
	20				
	25				
	30				
EN 1.4301 Equiv. SLRBF	8			-	-
	10				-
	12				
	15				
	20				
	25				
	30				

■One End Threaded One End Tapped, L Dimension Configurable

Part Number Type	B	Unit Price Min. L ~ 100	L101~200	L201~300	L301~400
EN 1.0038 Equiv. Electroless Nickel Plating PLRFG	8			-	-
	10				-
	12				
	15				
	20				
	25				
	30				
EN 1.4301 Equiv. SLRFG	8			-	-
	10				-
	12				
	15				
	20				
	25				
	30				

■One End Threaded One End Tapped, L Dimension & Thread Dia. Configurable

Part Number Type	B	Unit Price Min. L ~ 100	L101~200	L201~300	L301~400
EN 1.0038 Equiv. NLRGF	8			-	-
	10				-
	12				
	15				
	20				
	25				
	30				
EN 1.0038 Equiv. Black Oxide LRBGF	8			-	-
	10				-
	12				
	15				
	20				
	25				
	30				
EN 1.0038 Equiv. Electroless Nickel Plating PLRGF	8			-	-
	10				-
	12				
	15				
	20				
	25				
	30				
EN 1.4301 Equiv. SLRGF	8			-	-
	10				-
	12				
	15				
	20				
	25				
	30				

■Both Ends Tapped, L Dimension Configurable / One End Threaded One End Tapped, L Dimension Configurable

Part Number Type		B	L 1mm Increment	M (Coarse)
Both Ends Tapped EN 1.0038 Equiv. NLRFB LRFB PLRFB	One End Threaded One End Tapped EN 1.0038 Equiv. PLRFG	8	10~150	M4
		10	15~300	M5
		12	25~400	M6
		15	30~400	M8
		20	40~400	M10
EN 1.4301 Equiv. SLRFB	EN 1.4301 Equiv. SLRFG	25	50~400	M12
		30	60~400	M16

When L≤Mx4, tapped hole goes through. For One End Threaded One End Tapped Type, L ≥Tapped Mx3+2.
When L≤Mx6, the pilot hole may go through.

Example

Alteration WTP is used.

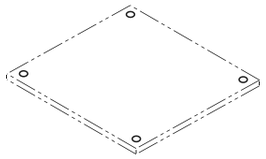

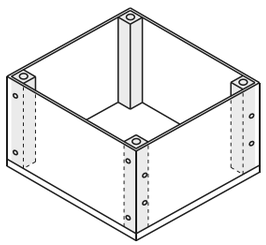

■Both Ends Tapped, L Dimension & Thread Dia. Configurable

Part Number Type	B	L 1mm Increment	M (Coarse) / N (Coarse) Selection
Both Ends Tapped EN 1.0038 Equiv. NLRBF LRBBF PLRBF	8	20~150	3 4 5
	10	20~300	4 5 6
	12	25~400	4 5 6 8
	15	30~400	4 5 6 8
EN 1.4301 Equiv. SLRBF	20	40~400	5 6 8 10 12
	25	50~400	6 8 10 12 16
	30	60~400	8 10 12 16

L≥Mx2+Nx2

■One End Threaded One End Tapped, L Dimension & Thread Dia. Configurable

Part Number Type	B	L 1mm Increment	F 1mm Increment	M (Coarse) Selection	N (Coarse) Selection	ℓ
One End Threaded One End Tapped EN 1.0038 Equiv. NLRGF LRBGF PLRGF	8	10~150	8~25	4 5	3 4 5	ℓ=F-A (ℓmax=Mx5)
	10	15~300	8~30	4 5 6	4 5 6	
	12	25~400	10~40	5 6 8	4 5 6 8	
	15	30~400	12~40	6 8 10	4 5 6 8	
EN 1.4301 Equiv. SLRGF	20	40~400	15~60	10 12	5 6 8 10 12	
	25	50~400	20~80	10 12 16	6 8 10 12 16	
	30	60~400	25~80	12 16 20	8 10 12 16	

For One End Threaded One End Tapped Type, L ≥Tapped Nx3+2.

· Min. Value of Incomplete External Thread

M	Amin
4	2
5	3
6	4
8	4
10	5
12	6
16	7
20	9

Ordering Example

Part Number	- L - F - M - N
(Both Ends Tapped, L Dimension Configurable)	NLRFB10 - 150
(Both Ends Tapped, L Dimension & Thread Dia. Configurable)	SLRBF20 - 400 - M8 - N10
(One End Threaded One End Tapped, L Dimension & Thread Dia. Configurable)	PLRGF15 - 350 - F32 - M8 - N6

Alterations

Part Number	- L - M - N -	(LKC, TP, WTP)
NLRFB8	- 150 -	LKC
NLRBF20	- 400 - M8 - N10 -	LKC
SLRBF15	- 100 - M5 - N6 -	TP20-P20-WTP30-K30

Alterations	Code	Spec.
L Dimension Tolerance	LKC	L Dimension tolerances are as follows: Ordering Code LKC L / L Tolerance 10~300 / ±0.05 301~400 / ±0.10

Alterations	Code	Spec.
Tapped Holes on Side 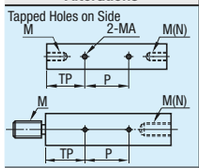	TP	Tapped hole machining provided on one side only. Ordering Code TP10-P10 Specify TP and P in 1mm increment. For Threaded Type, TP≥(2+MA/2); for Tapped Type, TP≥Mx2+MA/2. P≤L-TP-M(N)x2-MA/2 When P=0, there will be one tapped hole. Tap Dia. MA (Tap Depth: MAx1.5) B / MA 8~10 / M3 12~20 / M4 25~30 / M5
Tapped Holes on 2 Sides 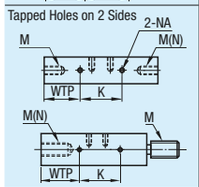	WTP	Adds side tapped holes at 90 degrees from TP. Ordering Code WTP10-K10 Specify WTP and K in 1mm increment. WTP≥(Mx2+M/2) K≤(L-WTP-M(N)x2-M(N)/2) When K=0, there will be one tapped hole. If specified at the TP location, tapped holes might interfere with each other. WTP is applied only when TP is used. For One End Threaded One End Tapped, the pitch order will be WTP to K from the tapped end. Tap Dia. NA (Tap Depth: NAx1.5) B / NA 8~10 / M3 12~20 / M4 25~30 / M5

Spacer Blocks

Tapped / Through Holes

Features: Block to adjust positions as a spacer.

Spacer Blocks

RoHS

Type				Material	Surface Treatment
Standard		O.D. and Hole Position Configurable			
Tapped	Through Holes	Tapped	Through Holes		
BLTB	BLHB	FLTB	FLHB	EN 1.0038 Equiv.	Black Oxide
BLTM	BLHM	FLTM	FLHM		Electroless Nickel Plating
BLTA	-	FLTA	FLHA	Aluminum Alloy 6000 series	Clear Anodize
-	BLHS	FLTS	FLHS	EN 1.4301 Equiv.	-

6.3 (6.3)

• Tapped

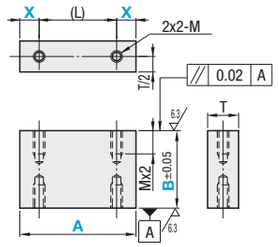

• Through Holes

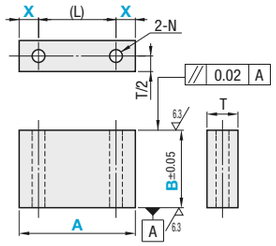

Standard

Part Number Type	No.	A Selection	B 5mm Increment Tapped	B 5mm Increment Through Holes	T BLTB BLTM BLHB BLHM BLHS	T BLTA	L	M	N
Tapped EN 1.0038 Equiv. BLTB BLTM / Through Holes EN 1.0038 Equiv. BLHB BLHM	4	32 38 60 75 100 125	15~80	10~50	9	10	L=A-(2xX)	4	4.5
	5				12	12		5	5.5
Aluminum Alloy 6000 series BLTA / EN 1.4301 Equiv. BLHS	6			10~60	16	15		6	6.5
	8			10~80	22	20		8	9

Taps go through when B≤4xM. When B≤6xM, the tap pilots go through.

*** X Dimension Details**

A	No.4, 5	No.6	No.8
32	6	7	8
38	6.5	8	9
60	10	10	10
75			
100			
125	12.5	12.5	12.5

O.D. and Hole Position Configurable Type

Part Number Type	No.	A 1mm Increment	B 1mm Increment Tapped	B 1mm Increment Through Holes	X 1mm Increment	T FLTB FLTM FLTS FLHB FLHM FLHS	T FLTA FLHA	L	M	N
Tapped EN 1.0038 Equiv. FLTB FLTM / Through Holes EN 1.0038 Equiv. FLHB FLHM	4	32 ~ 125	15~80	10~50	6~35	9	10	L=A-(2xX)	4	4.5
	5					12	12		5	5.5
EN AW-6063 Equiv. FLTA / EN AW-6063 Equiv. FLHA	6			10~60	7~35	16	15		6	6.5
EN 1.4301 Equiv. FLTS / EN 1.4301 Equiv. FLHS	8			10~80	8~35	22	20		8	9

Taps go through when B≤4xM. When B≤6xM, the tap pilots go through. A-(2xX)≥16

Ordering Example

Part Number	-	A	-	B	-	X
BLTB4	-	38	-	25		
BLHM8	-	60	-	30		
FLTM6	-	78	-	35	-	30

Example

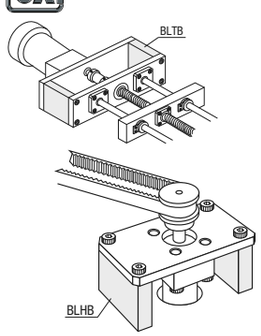

Alterations

Part Number	-	A	-	B	-	X	-	(NC)
BLTA8	-	60	-	30			-	NC

Alterations	Code	Spec.
Omits Taps on One Side 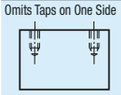	NC	Omits tapped holes on one side. Ordering Code NC. Applicable to Tapped Type only.

Standard

Part Number Type	No.	A	Unit Price Tapped Min. B ~ 30	Tapped B35~60	Tapped B65~80	Through Holes Min. B ~ 30	Through Holes B35~60	Through Holes B65~80
EN 1.0038 Equiv. Black Oxide BLTB BLHB	4	32, 38						-
		60, 75						-
		100, 125						-
	5	32, 38						-
		60, 75						-
		100, 125						-
	6	32, 38						-
		60, 75						-
		100, 125						-
	8	32, 38						
		60, 75						
		100, 125						
EN 1.0038 Equiv. Electroless Nickel Plating BLTM BLHM	4	32, 38						-
		60, 75						-
		100, 125						-
	5	32, 38						-
		60, 75						-
		100, 125						-
	6	32, 38						-
		60, 75						-
		100, 125						-
	8	32, 38						
		60, 75						
		100, 125						
EN AW-6063 Equiv. Clear Anodize BLTA	4	32, 38				-	-	-
		60, 75				-	-	-
		100, 125				-	-	-
	5	32, 38				-	-	-
		60, 75				-	-	-
		100, 125				-	-	-
	6	32, 38				-	-	-
		60, 75				-	-	-
		100, 125				-	-	-
	8	32, 38				-	-	-
		60, 75				-	-	-
		100, 125				-	-	-
EN 1.4301 Equiv. BLHS	4	32, 38	-	-	-			-
		60, 75	-	-	-			-
		100, 125	-	-	-			-
	5	32, 38	-	-	-			-
		60, 75	-	-	-			-
		100, 125	-	-	-			-
	6	32, 38	-	-	-			-
		60, 75	-	-	-			-
		100, 125	-	-	-			-
	8	32, 38	-	-	-			
		60, 75	-	-	-			
		100, 125	-	-	-			

O.D. and Hole Position Configurable Type

Part Number Type	No.	A	Unit Price Tapped Min. B ~ 34	Tapped B35~64	Tapped B65~80	Through Holes Min. B ~ 34	Through Holes B35~64	Through Holes B65~80
EN 1.0038 Equiv. Black Oxide FLTB FLHB	4	32~38						-
		39~99						-
		100~125						-
	5	32~38						-
		39~99						-
		100~125						-
	6	32~38						-
		39~99						-
		100~125						-
	8	32~38						
		39~99						
		100~125						
EN 1.0038 Equiv. Electroless Nickel Plating FLTM FLHM	4	32~38						-
		39~99						-
		100~125						-
	5	32~38						-
		39~99						-
		100~125						-
	6	32~38						-
		39~99						-
		100~125						-
	8	32~38						
		39~99						
		100~125						
EN AW-6063 Equiv. Clear Anodize FLTA FLHA	4	32~38						-
		39~99						-
		100~125						-
	5	32~38						-
		39~99						-
		100~125						-
	6	32~38						-
		39~99						-
		100~125						-
	8	32~38						
		39~99						
		100~125						
EN 1.4301 Equiv. FLTS FLHS	4	32~38						-
		39~99						-
		100~125						-
	5	32~38						-
		39~99						-
		100~125						-
	6	32~38						-
		39~99						-
		100~125						-
	8	32~38						
		39~99						
		100~125						

Posts for Stands, Device Stands, Stand-Up Brackets

Overview

MISUMI has a wide selection of products for stands for mounting various devices such as cameras and sensors.
Selectable from products such as Anti-Rotation Type and Easy Set-up Change Type depending on your application.

■Posts for Stands Posts for Stands for Device Mounting.

Applicable	Features	Round	Square
		The posts have O.D. Tolerance g6 or f8 for mounting strut clamps.	Prevents strut clamp of mounting devices from rotating.
Without Scale	Surfaces are finished. Length specifiable in 1mm increments.		
	Shaft Dimensions for Handling	6, 8, 10, 12, 15 20, 25, 30, 35, 40, 50	10, 12, 15, 20, 25
	Page	P.2143	P.2159
With Scale	Scale on surface helps setup changes.		
	Shaft Dimensions for Handling	10, 12, 15, 20, 25	10, 12, 15, 20, 25
	Page	P.2144	P.2159

■Device Stands A set of a post for stand and a bracket for device mounting.

Mounting Direction	Vertical Mounting			Side Mounting	
Bracket Shape	Compact	Round Flanged	Square Flanged	Compact	Standard
Posts for Stands + Brackets (Sets)					
Bracket only					
Features	Easy to use in limited spaces.	General-purpose and economical price	Narrower than Round Flanged Type. Slotted hole selectable for vertical and horizontal adjustments.	Installation footprint significantly reduced compared to Standard Type.	Best for side mounting on transfer lines, etc.
Shaft Dimensions for Handling	6, 8, 10, 12, 15, 20, 25, 30	10, 12, 15, 20, 25, 30, 35, 40, 50	10, 12, 15, 20, 25, 30, 35, 40, 50	10, 12, 15, 20, 25, 30, 35, 40, 50	10, 12, 15, 20, 25, 30, 35, 40, 50
Through Holes	P.2145	P.2147	P.2149	P.2151	P.2152
Slotted Hole	P.2146	-	P.2150	-	-

■Stand-Up Brackets The brackets support device mounting posts.

·Vertical Mounting with Round Hole

Shape	Round Type				Square Type	
	Milled Standard	Precision Casting Standard	Cylindrical	Reversed Fastening	Standard, Right/ Left Reversed	Compact
Appearance						
Features	Engagement without scratching the post is possible, best for frequent mounting and dismounting.	More economical than milled product due to precision cast product. Best for application where appearance is less important.	Compact shape without flange.	Firm engagement is ensured using tapped screws for post.	Secure mounting with square shape bases. Reversed Type with hole positions inverted is also available.	Installation footprint reduced by an average 28% compared to Standard Type.
Corresponding Shaft Dimensions (Recommended tolerances of shafts are g6/f8)	10, 12, 15, 16, 20, 25, 30, 35, 40, 50	10, 12, 15, 20, 25, 30, 35, 40, 50	10, 12, 15, 20, 25, 30, 35, 40, 50	6, 8, 10, 12, 13, 15, 16, 20, 25, 30	10, 12, 15, 20, 25, 30, 35, 40, 50	10, 12, 15, 20, 25, 30
Page	P.2153	P.2153	P.2154	P.2154	P.2155	P.2156

·Mount to Round Hole side

Shape	Square Type			
	Milled Standard	Casting Standard	Compact	Non-Flanged
Appearance				
Features	Best for side mounting on transfer lines, etc.	More economical than milled product due to cast product. Best for application where appearance is less important.	25 ~ 30% shorter in height, approximately 10% narrower in width compared to Standard Type.	Since there is no flange, installation footprint is less than half compared to Standard Type.
Corresponding Shaft Dimensions (Recommended tolerances of shafts are g6/f8)	10, 12, 15, 16, 20, 25, 30, 35, 40, 50	20, 25, 30, 35, 40, 50	20, 25, 30, 35, 40, 50	10, 12, 15, 20, 25, 30
Page	P.2157	P.2158	P.2157	P.2156

·Square Hole Vertical/Side Mounting

Mounting Direction	Vertical Mounting	Side Mounting
Shape	Square Type	
Appearance		
Features	Vertical mounting type for square bars/square tubes, best for anti-rotation of shaft.	Side mounting type for square bars/square tubes, best for anti-rotation of shaft.
Corresponding Shaft Dimensions (Recommended tolerances of shafts are 0~-0.12)	10, 12, 15, 20, 25	
Page	P.2160	

Posts for Stands / Caps for Hollow Posts

Features: Can be used in combination with Device Stands, Stand-Up Brackets and Strut Clamps.

Posts for Stands

Type Solid	Type Hollow	Material / Hardness	Surface Treatment
STN	STA	EN 1.1191 Equiv. 58HRC~ Case Induction Hardened (Depth 1.0 ~ 1.5)	-
STNM	STAM		Electroless Nickel Plating
MSTNM	MSTAM	EN 1.1191 Equiv.	Electroless Nickel Plating
GSTNM	GSTAM	EN 1.1191 Equiv.	Black Oxide
STNUG	SMSTAM	EN 1.4301 Equiv.	-

Surface treatment is not applied to ends and grooves of STNM, STAM, MSTNM, MSTAM, GSTNM and GSTAM.

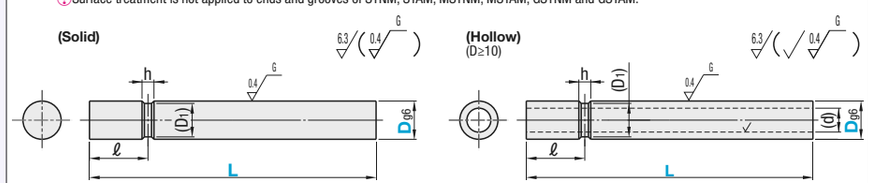

Part Number Type	Dg6		L 1mm Increment	(D1)	ℓ	h	(d)
Solid STN STNM MSTNM GSTNM STNUG / Hollow STA STAM MSTAM GSTAM SMSTAM	6	-0.004 -0.012	30~150	4.5	12	4	-
	8	-0.005	30~200	6.5	15		
	10	-0.014	35~250	8.5	18		6.0
	12	-0.006	35~300	10			
	15	-0.017	40~350	13	20	5	10.0
	20	-0.007 -0.020	45~400	17	25		11.7
	25		50~450	22	30	6	15.2
	30		60~450	27			16.0
	35	-0.009 -0.025	70~500	32	40	8	20.1
	40		80~500	37			22.7
	50		100~600	46	50	10	30.8

Hollow Posts are available from D10. STN is applicable from D8.

Ordering Example: Part Number - L
STNUG12 - 250

Alterations: Part Number - L - (MN, MTC)
STN8 - 100 - MN

Alteration	Code	Spec.
No Groove 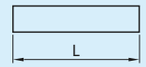	MN	Alteration to No Set Screw Groove. Ordering Code MN
One End Tapped 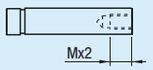	MTC	Tapped at one end. Ordering Code MTC8

Dg6	M (Coarse)
8	3
10	3 4
12	4 5
15	4 5 6
20	5 6 8
25	6 8 10
30	8 10 12
35	10 12 16
40	10 12 16
50	10 12 16

Applicable to Solid Type only.
Not applicable to D=6.

D	L	Unit Price Solid STN	STNM	MSTNM	GSTNM	STNUG	Hollow STA	STAM	MSTAM	GSTAM	SMSTAM
6	30~100	-			-		-	-	-	-	-
	101~150										
8	30~100										
	101~200										
10	35~150										
	151~250										
12	35~150										
	151~300										
15	40~200										
	201~350										
20	45~200										
	201~400										
25	50~200										
	201~450										
30	60~200										
	201~450										
35	70~300										
	301~500										
40	80~300										
	301~500										
50	100~300										
	301~600										

Features: Caps can be mounted on the end face of Hollow Posts on P.2145~P.2152.

Caps for Hollow Posts

CAP

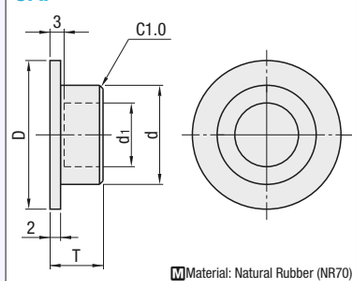

Material: Natural Rubber (NR70)

Part Number Type	No.	D	d	d1	T	Unit Price 1 ~ 19 pc(s).	Volume Discount Rate 20 ~ 50 pcs.
CAP	10	9	6.2	3	8		
	12	11					
	15	14	10.2	6			
	20	18	12.0				
	25	23	15.5	9			
	30	28	16.5	10			
	35	33	20.5	13	10		
	40	38	23.0	15			
	50	48	31.3	16			

For orders larger than indicated quantity, please check with WOS.

Ordering Example: Part Number
CAP25

Posts for Stands

With Scale / Length Configurable with Scale

Features: Easy to adjust positions of cameras and sensors during setup changes. Hollow Type is capable of storing wiring.

With Scale

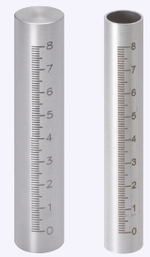

Type Solid	Type Hollow	Material
GSSTN	GSSTA	EN 1.4301 Equiv.

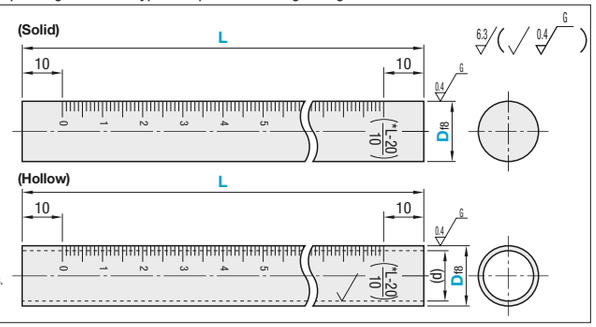

If wiped with volatile oil, the prints may fade.
The scale graduations are represented in centimeters.
Use the scale as a reference.
* Scale indicates up to (L-20)/10.

Part Number Type	Df8		L Selection	(d)	Unit Price GSSTN L100	L150	L200	L250	L300	GSSTA L100	L150	L200	L250	L300
GSSTN GSSTA	10	-0.013 -0.035	100 150 200	8				-	-				-	-
	12	-0.016 -0.043	100 150 200 250 300	10										
	15		100 150 200 250 300	12.6										
	20	-0.020 -0.053	100 150 200 250 300	16										
	25		200 250 300	-	-	-				-	-	-	-	-

Ordering Example: Part Number - L
GSSTN15 - 200
GSSTA20 - 300

Length Configurable with Scale

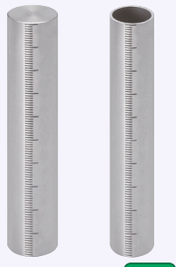

Type Solid	Type Hollow	Material
FGSTN	FGSTA	EN 1.4301 Equiv.

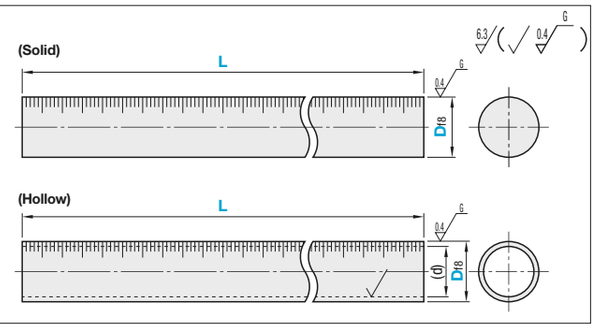

If wiped with volatile oil, the prints may fade.
Scale is without numbers.
Use the scale as a reference.

Part Number Type	Df8		L 1mm Increment	(d)	Unit Price FGSTN Min. L ~ 200	201~400	401~450	FGSTA Min. L ~ 200	201~400	401~450
FGSTN FGSTA	10	-0.013 -0.035	35~450	8						
	12	-0.016 -0.043	35~450	10						
	15		40~450	12.6						
	20	-0.020 -0.053	45~450	16						
	25		50~450	20						

Ordering Example: Part Number - L
FGSTN10 - 100
FGSTA20 - 200

Example

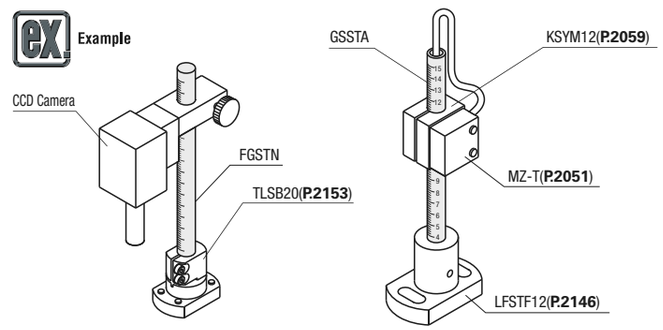

Device Stands
Compact - Through Hole

Features: A set of a device mounting post and a stand for mounting in limited spaces.

Sets (Posts + Brackets)

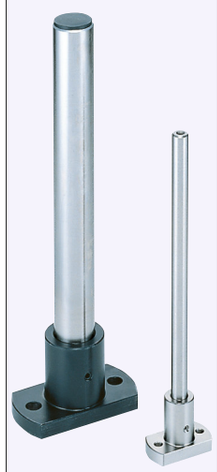

Bracket only

RoHS

Sets (Posts + Brackets)

Type Solid	Type Hollow	Post Material / Hardness	Post Surface Treatment	Bracket Material	Bracket Surface Treatment	Accessory Solid	Accessory Hollow
FSBNM	FSBAM	EN 1.1191 Equiv. Induction Hardened	Electroless Nickel Plating	EN 1.1191 Equiv.	LTBC Plating	Set Screw	Set Screw Cap (P.2143)
MFSBN	MFSBA	EN 1.1191 Equiv.					
KFSBN	KFSBA		Black Oxide				
MSFSBN	MFSBB	EN 1.4301 Equiv.	-				
FSTNM	FSTAM	EN 1.1191 Equiv. Induction Hardened	Electroless Nickel Plating	EN 1.1191 Equiv.	Electroless Nickel Plating		
MFSTN	MFSTA	EN 1.1191 Equiv.					
MSFSTN	MFSTB	EN 1.4301 Equiv.	-				
KBFSBN	KBFSBA	EN 1.1191 Equiv.	Black Oxide	EN 1.1191 Equiv.	Black Oxide		
MSFSS	MFSSS	EN 1.4301 Equiv.	-	EN 1.4301 Equiv.	-		

* Case Induction Hardened (Post): 58HRC ~, Depth 1.0 ~ 1.5
* For Posts for Stands only, see **P.2143, 2144**.
* No Electroless Nickel Plating and Black Oxide at ends and grooves of posts.

Bracket only

Type	Material	Surface Treatment	Accessory
MFSBF	EN 1.1191 Equiv.	LTBC Plating	Set Screw
MFSTF		Electroless Nickel Plating	
MFSLF		Black Oxide	
MFSS	EN 1.4301 Equiv.	-	

6.3 / (6.3 1.6 0.4 G)

· Sets (Posts + Brackets)

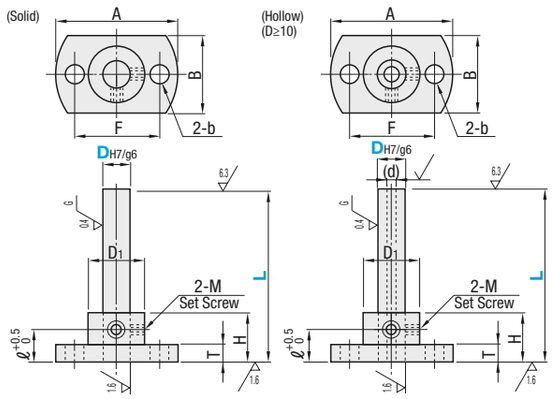

· Bracket only

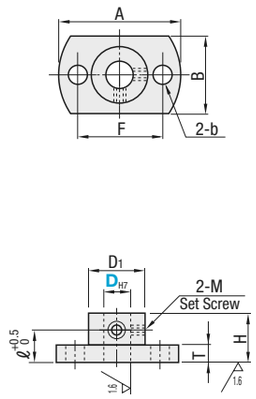

Part Number Type	Dg6		L 1mm Increment	A	B	F	D1	H	T	ℓ	b	M	(d)
Set (Solid) FSBNM, MFSBN, KFSBN, MSFSBN, FSTNM, MFSTN, MSFSTN, KBFSBN, MSFSS; Set (Hollow) FSBAM, MFSBA, KFSBA, MFSBB, FSTAM, MFSTA, MFSTB, KBFSBA, MFSSS; Bracket only MFSBF, MFSTF, MFSLF, MFSS	*1 6	-0.004 -0.012	50~150	33	18	23	14	20	6	12.5	4.5	M4	-
	8	-0.005 -0.014	50~200	38	20	26	16	30	8	15			
	10		50~250	40	22	28	18	35		18			6.0
	12	-0.006 -0.017	50~300	46	24	32	20	35	8	18	5.5	M4	6.0
	15		75~350	56	29	40	25	40		20	6.6	M5	10.0
	20	-0.007 -0.020	75~400	63	34	46	30	45	10	25	6.6	M5	11.7
	25		75~450	78	41	56	37	50		30	9	M6	15.2
	30		100~450	82	46	62	42	60					16.0

*1. D6 is available for FSTNM, MFSBN, MFSTN, MSFSTN, MFSBF and MFSTF only. Hollow posts are available from D10. Refer to the price list for availability of brackets as a separate item.

Ordering Example: Part Number - L
MFSTN15 - 250
MFSBF20

Sets (Posts + Brackets)

D	L	Solid: *2FSBNM FSTNM	Solid: MFSBN MFSTN	Solid: KFSBN	Solid: *2MSFSBN MSFSTN	Solid: KBFSBN	Solid: MSFSS	Hollow: FSBAM FSTAM	Hollow: MFSBA MFSTA	Hollow: KFSBA	Hollow: MFSBB MFSTB	Hollow: KBFSBA	Hollow: MFSSS
6	Min. L ~ 100			-		-	-	-	-	-	-	-	-
	101~150												
8	Min. L ~ 100							-	-	-	-	-	-
	101~200												
10	Min. L ~ 150												
	151~250												
12	Min. L ~ 150												
	151~300												
15	Min. L ~ 200												
	201~350												
20	Min. L ~ 200												
	201~400												
25	Min. L ~ 200												
	201~450												
30	Min. L ~ 200												
	201~450												

*2. D6 is not available for FSBNM and MSFSBN.

Bracket only

D	MFSBF MFSTF	MFSLF	MFSS
6		-	-
8			
10			
12			
15			
20			
25			
30			

Device Stands
Compact - Slotted Hole

Features: A set of a device mounting post and a stand for fine-tuning and mounting in limited spaces.

Sets (Posts + Brackets)

Bracket only

RoHS

Sets (Posts + Brackets)

Type Solid	Type Hollow	Post Material / Hardness	Post Surface Treatment	Bracket Material	Bracket Surface Treatment	Accessory Solid	Accessory Hollow
LFSBN	LFSBA	EN 1.1191 Equiv.	Electroless Nickel Plating	EN 1.1191 Equiv.	LTBC Plating	Set Screw Washer	Set Screw Washer Cap (P.2143)
LFSTSM	-	EN 1.1191 Equiv. Induction Hardened	Electroless Nickel Plating	EN 1.1191 Equiv.	Electroless Nickel Plating		
LFSTN	LFSTA	EN 1.1191 Equiv.					
LSFSS	-	EN 1.4301 Equiv.	-	EN 1.4301 Equiv.	-		

* Case Induction Hardened (Post): 58HRC ~, Depth 1.0 ~ 1.5
* For Posts for Stands only, see **P.2143, 2144**.
* No Electroless Nickel Plating and Black Oxide at ends and grooves of posts.
* Surface treatment is not applied to the inside of the slotted holes.

Bracket only

Type	Material	Surface Treatment	Accessory
LFSBF	EN 1.1191 Equiv.	LTBC Plating	Set Screw
LFSTF		Electroless Nickel Plating	

6.3 / (6.3 1.6 0.4 G)

· Sets (Posts + Brackets)

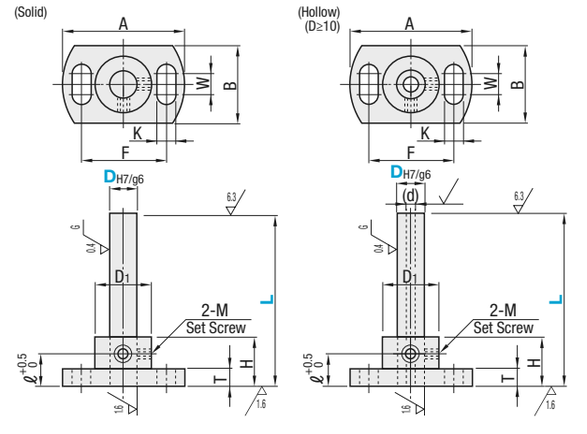

· Bracket only

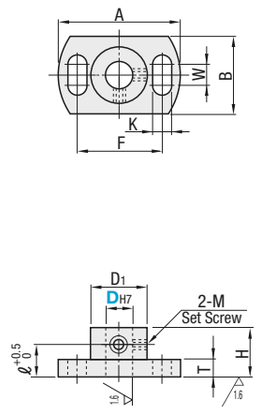

Part Number Type	Dg6		L	A	B	F	W	K	D1	H	T	ℓ	M	(d)	LTBC Plating Bracket Included Washer	Electroless Nickel Plating Bracket Included Washer	EN 1.4301 Equiv. Bracket Included Washer
Set (Solid) LFSBN, LFSTSM, LFSTN, LSFSS; Set (Hollow) LFSBA, LFSTA; Bracket only LFSBF, LFSTF	6	-0.004 -0.012	50~150	33	18	23	6	4.5	14	20	6	12.5	M4	-	WSSB6-4-2	WSSM6-4-2	WSSS6-4-2
	8	-0.005 -0.014	50~200	38	20	26			16	30	8	15			WSSB10-4-2	WSSM10-4-2	WSSS10-4-2
	10		50~250	40	22	28			18	35		18		6			
	12	-0.006 -0.017	50~300	46	24	32	6	5.5	20	35	8	18	M4	6	WSSB12-5-2	WSSM12-5-2	WSSS12-5-2
	15		75~350	56	29	40	10	6.6	25	40		20	M5	10	WSSB14-6-3	WSSM14-6-3	WSSS14-6-3
	20	-0.007 -0.020	75~400	63	34	46	10	6.6	30	45	10	25	M5	11.7	WSSB14-6-3	WSSM14-6-3	WSSS14-6-3
	25		75~450	78	41	56		9	37	50		30	M6	15.2	WSSB16-8-3	WSSM16-8-3	WSSS16-8-3
	30		100~450	82	46	62			42	60				16			

Hollow posts are available from D10. Refer to the price list for availability of Brackets as a separate item.

Ordering Example: Part Number - L
LFSTN15 - 250
LFSBF20

Example

For Sensor Mounting (with Single Bracket)

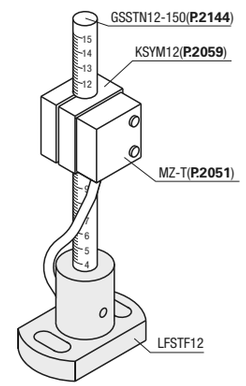

Sets (Posts + Brackets)

D	L	Solid: LFSBN LFSTN	Solid: LFSTSM	Solid: LSFSS	Hollow: LFSBA LFSTA
6	Min. L ~ 100			-	-
	101~150				
8	Min. L ~ 100				-
	101~200				
10	Min. L ~ 150				
	151~250				
12	Min. L ~ 150				
	151~300				
15	Min. L ~ 200				
	201~350				
20	Min. L ~ 200				
	201~400				
25	Min. L ~ 200				
	201~450				
30	Min. L ~ 200				
	201~450				

Bracket only

D	LFSBF	LFSTF
6		-
8	-	
10		
12		
15		
20		
25	-	
30		

Device Stands

Round Flanged, Through Holes

Features: A set of a post and stand for mounting a round flanged type device.

Sets (Posts + Brackets)

Bracket only

RoHS

Sets (Posts + Brackets)

Type: Round Flanged Solid	Type: Round Flanged Hollow	Type: Round Flanged, Dowel Holes Solid	Post: M Material H Hardness	Post: S Surface Treatment	Bracket: M Material	Bracket: S Surface Treatment	A Accessory: Solid	A Accessory: Hollow
CSTN	CSTA	CSPN	EN 1.1191 Equiv. Induction Hardened	-	EN-JL 1040 Equiv.	Black oxide or Phosphate Conversion Coat	Set Screw Hex Socket Head Screw	Set Screw Hex Socket Head Screw Cap (P.2143)
MCSTN	MCSTA	MCSPN	EN 1.1191 Equiv.	Electroless Nickel Plating				
SCSTN	SCSTA	SCSPN	EN 1.4301 Equiv.	-				
CSTNM	CSTAM	-	EN 1.1191 Equiv. Induction Hardened	Electroless Nickel Plating	EN-JL 1040 Equiv.	Electroless Nickel Plating		
MCSTNM	MCSTAM		EN 1.1191 Equiv.					
SCSTNM	SCSTAM		EN 1.4301 Equiv.	-				

* Dowel Hole Type includes dowel pins.

Bracket only

Type: No Dowel Hole	Type: With Dowel Holes	M Material	S Surface Treatment	A Accessory: No Dowel Hole	A Accessory: With Dowel Holes
CSTF	CSPF	EN-JL 1040 Equiv.	Black oxide or Phosphate Conversion Coat	Set Screw	Set Screw Dowel Pin (EN 1.3505 Equiv.)
CSTFM	-		Electroless Nickel Plating		

* Case Induction Hardened(Post): 58HRC ~, Depth 1.0 ~ 1.5
* No Electroless Nickel Plating at ends and grooves of posts.
* For Hex Socket Head Cap Screws, a black oxide bracket matches a black oxide screw, and an electroless nickel plating bracket matches a trivalent chromate screw.

· Sets (Posts + Brackets)

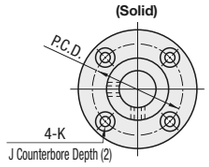

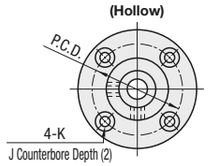

· Bracket only

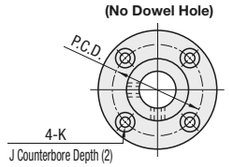

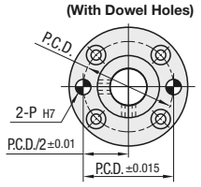

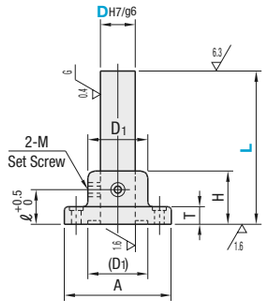

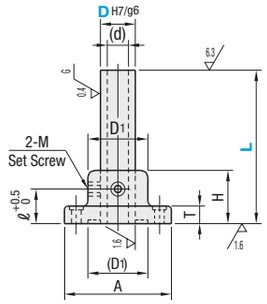

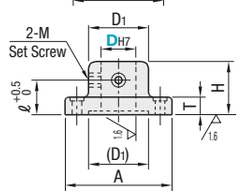

Part Number: Type		Dg6		L 1mm Increment	A	D1	H	T	ℓ	P.C.D.	K	J	M	(d)	Bracket with Dowel Holes: PH7	Tolerance	Included Dowel Pin (2 pcs.) Tolerance m6	Included Hex Socket Head Cap Screw
Set (Solid) CSTN, MCSTN, SCSTN, CSTNM, MCSTNM, SCSTNM	Set (Hollow) CSTA, MCSTA, SCSTA, CSTAM, MCSTAM, SCSTAM	10	-0.005 -0.014	50~250	56	26	35	12	18	43	4.5	11	M4	6.0	6	+0.012 0	MSTM6-20	M4-20x4 pcs.
		12	-0.006 -0.017	50~300	68	28				51	5.5	13						M5-20x4 pcs.
		15		75~350	75	31	40		20	56	6.6	15	M5	10.0				M6-25x4 pcs.
		20	-0.007 -0.020	75~400	86	40	45	12	25	65	6.6	15	M5	11.7	6	+0.012 0	MSTM6-20	M6-25x4 pcs.
(Rods with Dowel Holes) CSPN, MCSPN, SCSPN		25		75~450	100	45	50		30	75	9	18	M6	15.2	8	+0.015 0	MSTM8-20	M8-25x4 pcs.
		30		100~450	106	50	60			80				16.0				
Bracket only CSTF, CSTFM	Bracket only with Dowel Holes CSPF	35	-0.009 -0.025	125~500	118	55	70	15	40	90	11	20	M8	20.1	10	+0.015 0	MSTM10-30	M10-35x4 pcs.
		40		150~500	125	60	80			95				22.7				
		50		200~600	140	70	100		50	106	14	24	M10	30.8				M12-35x4 pcs.

Ordering Example

Part Number	-	L
MCSPN50	-	500
CSTF20		

Round Flanged Set

D	L	Unit Price: Solid CSTN	MCSTN	SCSTN	CSTNM	MCSTNM	SCSTNM	Hollow CSTA	MCSTA	SCSTA	CSTAM	MCSTAM	SCSTAM
10	50~150												
	151~250												
12	50~150												
	151~300												
15	75~200												
	201~350												
20	75~200												
	201~400												
25	75~200												
	201~450												
30	100~200												
	201~450												
35	125~300												
	301~500												
40	150~300												
	301~500												
50	200~300												
	301~600												

Round Flanged with Dowel Holes Set

D	L	Unit Price: Solid CSPN	MCSPN	SCSPN
10	50~150			
	151~250			
12	50~150			
	151~300			
15	75~200			
	201~350			
20	75~200			
	201~400			
25	75~200			
	201~450			
30	100~200			
	201~450			
35	125~300			
	301~500			
40	150~300			
	301~500			
50	200~300			
	301~600			

Bracket only

DH7	Tolerance	Unit Price: CSTF	CSTFM	CSPF
10	+0.015 0			
12	+0.018 0			
15				
20	+0.021 0			
25				
30				
35	+0.025 0			
40				
50				

Alterations

Part Number	-	L	-	(BH)
CSTN15	-	150	-	BH

Alterations	Code	Spec.
Mounting Holes Enlarged	BH	Enlarges mounting holes for fine-tuning.

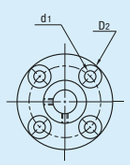

Ordering Code: BH

D	Included Screw	Adj. Range	d1	D2	Included Washer (P.2-113) Black Oxide	Electroless Nickel Plating
10	M 4	±1	6	13	WSSB10-4-2	WSSM10-4-2
12	M 5		7	15	WSSB12-5-2	WSSM12-5-2
15	M 6	±1.5	9	18	WSSB14-6-3	WSSM14-6-3
20			10	20		
25	M 8	±2	12	22	WSSB16-8-3	WSSM16-8-3
30						
35	M10	±2.5	15	28	WSSB20-10-3	WSSM20-10-3
40						
50	M12	±3	18	32	WSSB25-12-5	WSSM25-12-5

Counterbore Depth is 2mm. 4 screws and 4 washers are included.
Not available for Dowel Hole Type.

Device Stands

Square Flanged, Through Hole Type

Features: Smaller vertical dimension enables mounting in narrow spaces.

Sets (Posts + Brackets)

Bracket only

RoHS

Sets (Posts + Brackets)

Type: Square Flanged, Solid	Type: Square Flanged, Hollow	Type: Square Flanged, Dowel Holes, Solid	Type: Square Flanged, Dowel Holes, Hollow	Post: M Material	Post: H Hardness	Post: S Surface Treatment	Bracket: M Material	Bracket: S Surface Treatment	A Accessory: Solid	A Accessory: Hollow
ASTN	ASTA	ASPN	ASPA	EN 1.1191 Equiv.	Induction Hardened	-	EN-JL 1040 Equiv.	Black oxide or Phosphate Conversion Coat	Set Screw Hex Socket Head Screw	Set Screw Hex Socket Head Screw Cap (P.2143)
MASTN	MASTA	MASPN	MASPA	EN 1.1191 Equiv.		Electroless Nickel Plating				
KASTN	KASTA	KASPN	KASPA			Black Oxide				
SASTN	SASTA	SASPN	SASPA	EN 1.4301 Equiv.		-				
ASTNM	ASTAM	-	-	EN 1.1191 Equiv.	Induction Hardened	Electroless Nickel Plating	EN-JL 1040 Equiv.	Electroless Nickel Plating		
MASTNM	MASTAM			EN 1.1191 Equiv.						
SASTNM	SASTAM			EN 1.4301 Equiv.		-				

(Rods with Dowel Holes): ASPN, MASPN, KASPN, SASPN
(Pipe with Dowel Holes): ASPA, MASPA, KASPA, SASPA
Bracket only: ASTF, ASTFM
Bracket only with Dowel Holes: ASPF

Bracket only

Type: No Dowel Hole	Type: With Dowel Holes	M Material	S Surface Treatment	A Accessory: No Dowel Hole	A Accessory: With Dowel Holes
ASTF	ASPF	EN-JL 1040 Equiv.	Black oxide or Phosphate Conversion Coat	Set Screw	Set Screw Dowel Pin (EN 1.3505 Equiv.)
ASTFM	-		Electroless Nickel Plating		

* Case Induction Hardened (Post): 58HRC ~, Depth 1.0 ~ 1.5
* Dowel Hole Type includes dowel pins.
* No Electroless Nickel Plating and Black Oxide at ends and grooves of posts.
* For Hex Socket Head Cap Screws, a black oxide bracket matches a black oxide screw, and an electroless nickel plating bracket matches a trivalent chromate screw.

• Sets (Posts + Brackets)

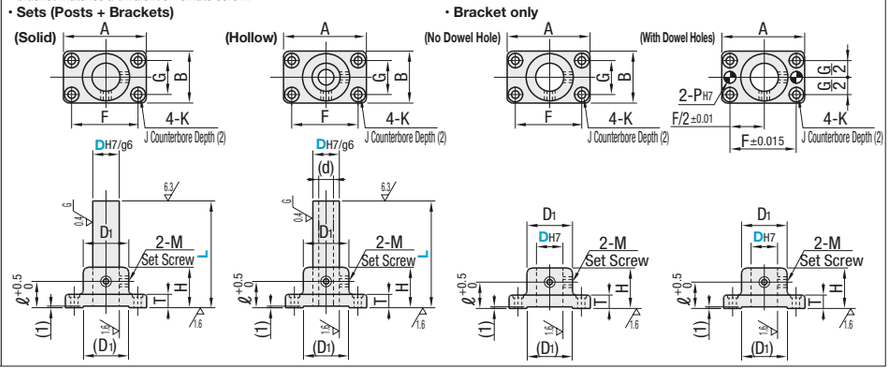

• Bracket only

Part Number: Type	Part Number: DH7	Tolerance	L 1mm Increment	A	B	F	G	D1	H	T	ℓ	K	J	M	(d)	Bracket with Dowel Holes: PH7	Tolerance	Included Dowel Pin (2 pcs.) Tolerance m6	Included Hex Socket Head Cap Screw
Set (Solid) ASTN MASTN KASTN SASTN ASTNM MASTNM SASTNM (Hollow) ASTA MASTA KASTA SASTA ASTAM MASTAM SASTAM	10	-0.005 -0.014	50~250	56	30	40	14	26	35	12	18	4.5	11	M4	6	-	-	-	M4-20x4 pcs.
	12	-0.006 -0.017	50~300	62	36	44	18	28				5.5	13						M5-20x4 pcs.
	15		75~350	70	40	50	20	31	40		20	6.6	15	M5	10				M6-25x4 pcs.
	20	-0.007 -0.020	75~400	80	50	60	30	40	45	12	25	6.6	15	M5	11.7	6	+0.012 0	MSTM6-20	M6-25x4 pcs.
(Rods with Dowel Holes) ASPN MASPN KASPN SASPN (Pipe with Dowel Holes) ASPA MASPA KASPA SASPA	25		75~450	100	60	75	36	45	50		30	9	18	M6	15.2	8	+0.015 0	MSTM8-20	M8-25x4 pcs.
	30		100~450	106		80		50	60						16.0				
Bracket only ASTF ASTFM	35	-0.009 -0.025	125~500	118	80	90	40	55	70	15	40	11	20	M8	20.1	10	+0.015 0	MSTM10-30	M10-35x4 pcs.
Bracket only with Dowel Holes ASPF	40		150~500	125		95		60	80						22.7				
	50		200~600	140	100	106	50	70	100		50	14	24	M10	30.8				M12-35x4 pcs.

Bracket ASPF with Dowel Holes is available from D20. For available sizes of the brackets, refer to the price list.

Part Number - L
ASTN40 - 400
ASTF20

Square Flanged Set

D	L	Solid: ASTN	MASTN	KASTN	SASTN	ASTNM	MASTNM	SASTNM	Hollow: ASTA	MASTA	KASTA	SASTA	ASTAM	MASTAM	SASTAM
10	50~150														
	151~250														
12	50~150														
	151~300														
15	75~200														
	201~350														
20	75~200														
	201~400														
25	75~200														
	201~450														
30	100~200														
	201~450														
35	125~300														
	301~500														
40	150~300														
	301~500														
50	200~300														
	301~600														

Unit Price

Alterations: Part Number - L - (BH)
ASTA25 - 400 - BH

Alteration	Code	Spec.
Mounting Holes Enlarged	BH	Enlarges mounting holes for fine-tuning. Ordering Code BH. Not available for Dowel Hole Type. Counterbore Depth is 2mm. 4 screws and 4 washers are included.

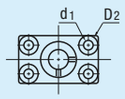

D	Included Screw	Adj. Range	d1	D2	Included Washer (P.2-113) Black Oxide	Electroless Nickel Plating
10	M4	±1	6	13	WSSB10-4-2	WSSM10-4-2
12	M5		7	15	WSSB12-5-2	WSSM12-5-2
15	M6	±1.5	9	18	WSSB14-6-3	WSSM14-6-3
20		±2	10	20		
25, 30	M8		12	22	WSSB16-8-3	WSSM16-8-3
35, 40	M10	±2.5	15	28	WSSB20-10-3	WSSM20-10-3
50	M12	±3	18	32	WSSB25-12-5	WSSM25-12-5

Bracket only

DH7	Tolerance	Unit Price: ASTF	ASTFM	ASPF
10	+0.015 0			-
12	+0.018 0			-
15				-
20	+0.021 0			
25				
30				
35	+0.025 0			
40				
50				

Device Stands

Square Flanged, Slotted Hole Type

Features: Slotted holes enable fine adjustments when mounting.

Sets (Posts + Brackets)

Bracket only

RoHS

Sets (Posts + Brackets)

Type: Horizontal Adjustment, Solid	Type: Horizontal Adjustment, Hollow	Type: Vertical Adjustment, Solid	Type: Vertical Adjustment, Hollow	Post: M Material	Post: H Hardness	Post: S Surface Treatment	Bracket: M Material	Bracket: S Surface Treatment	A Accessory: Solid	A Accessory: Hollow
ASTX	ASPX	ASTY	ASPY	EN 1.1191 Equiv.	Induction Hardened	-	EN-JL 1040 Equiv.	Black oxide or Phosphate Conversion Coat	Set Screw Hex Socket Head Screw Washers	Set Screw Hex Socket Head Screw Washer Caps (P.2143)
AQTX	AQPX	AQTY	AQPY	EN 1.1191 Equiv.		Electroless Nickel Plating				
AMTX	AMPX	AMTY	AMPY	EN 1.1191 Equiv.	Induction Hardened	Electroless Nickel Plating	EN-JL 1040 Equiv.	Electroless Nickel Plating		
APTX	APPX	APTY	APPY	EN 1.1191 Equiv.						
ACTX	ACPX	ACTY	ACPY	EN 1.4301 Equiv.		-				

Bracket only

Type: Horizontal Adjustment	Type: Vertical Adjustment	M Material	S Surface Treatment	A Accessory
ABFX	ABFY	EN-JL 1040 Equiv.	Black oxide or Phosphate Conversion Coat	Set Screw
AMFX	AMFY		Electroless Nickel Plating	

* Case Induction Hardened (Post): 58HRC ~, Depth 1.0 ~ 1.5
* No Electroless Nickel Plating at ends and grooves of posts.
* For Hex Socket Head Cap Screws, a black oxide bracket matches a black oxide screw, and an electroless nickel plating bracket matches a trivalent chromate screw.
Surface treatment is not applied to the inside of the slotted holes. The mounting pitch differs from the Square Flanged (P.2149).

• Sets (Posts + Brackets)

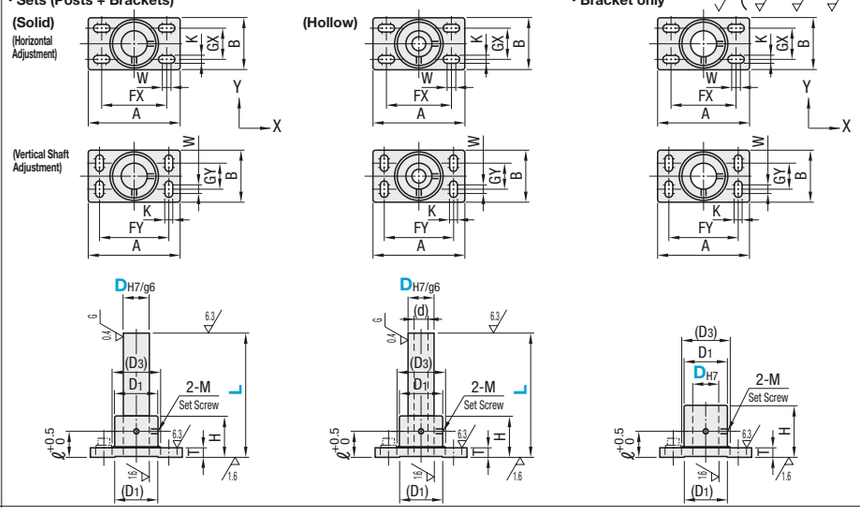

• Bracket only

Part Number: Type	Part Number: DH7	Tolerance	L 1mm Increment	Adj. Range	A	B	FX	FY	GX	GY	K	W	D1	(D3)	H	T	ℓ	M	(d)	Included Hex Socket Head Cap Screw
Set Horizontal Adjustment (Solid) ASTX AQTX AMTX APTX ACTX (Hollow) ASPX AQPX AMPX APPX ACPX	10	-0.005 -0.014	50~250	±2.5	56	30	40	40	14	14	4.5	5	26	28	35	11	18	M4	6.0	M4-20x4 pcs.
	12	-0.006 -0.017	50~300		62	36	44	44	18	18	5.5		28	30	35					M5-25x4 pcs.
	15		75~350	±3	70	40	50	50	20	20	6.6	6	31	33	40		20	M5	10.0	M6-25x4 pcs.
	20	-0.007 -0.020	75~400	±5	80	50	56	60	35	25	6.6	10	40	43	45	11	25	M5	11.7	M6-25x4 pcs.
	25		75~450		100	60	70	75	36	30	9		45	52	50		30	M6	15.2	M8-25x4 pcs.
Vertical Adjustment (Solid) ASTY AQTY AMTY APTY ACTY (Hollow) ASPY AQPY AMPY APPY ACPY	30		100~450		106		75	80					50	56	60				16.0	
	35	-0.009 -0.025	125~500	±7.5	118	80	80	90	50	40	11	15	55	60	70	14	40	M8	20.1	M10-35x4 pcs.
	40		150~500		125		88	95					60	66	80				22.7	
	50		200~600	±10	140	100	95	106	70	50	14	20	70	77	100		50	M10	30.8	M12-35x4 pcs.

For available sizes of the brackets, refer to the price list.

Ordering Example: Part Number - L
ASPX30 - 400
ABFY20

Sets (Posts + Brackets)

D	L	Solid: ASTX ASTY	AQTX AQTY	AMTX AMTY	APTX APTY	ACTX ACTY	Hollow: ASPX ASPY	AQPX AQPY	AMPX AMPY	APPX APPY	ACPX ACPY
10	50~150										
	151~250										
12	50~150										
	151~300										
15	75~200										
	201~350										
20	75~200										
	201~400										
25	75~200										
	201~450										
30	100~200										
	201~450										
35	125~300										
	301~500										
40	150~300										
	301~500										
50	200~300										
	301~600										

Unit Price

Bracket only

DH7	Tolerance	Unit Price: ABFX	ABFY	AMFX	AMFY
10	+0.015 0			-	-
12	+0.018 0				
15					-
20	+0.021 0				
25					
30					
35	+0.025 0				
40					
50					

Device Stands
Side Mounting, Compact

Features: More compact than the Side Mounting Type on the next page with an average 36% reduced footprint.

Sets (Posts + Brackets)

Bracket only

RoHS

Sets (Posts + Brackets)

Type		Post		Bracket		Accessory	
Solid	Hollow	M Material H Hardness	S Surface Treatment	M Material	S Surface Treatment	Solid	Hollow
CCTN	CCTA	EN 1.1191 Equiv. Induction Hardened	-	EN-JL 1040 Equiv.	Black oxide or Phosphate Conversion Coat	Set Screw	Set Screw Cap (P.2143)
MCCTN	MCCTA	EN 1.1191 Equiv.	Electroless Nickel Plating				
MCCTNM	MCCTAM	EN 1.1191 Equiv.	Electroless Nickel Plating	EN-JL 1040 Equiv.	Electroless Nickel Plating		

* Case Induction Hardened (Post): 58HRC ~, Depth 1.0 ~ 1.5

Bracket only

Type	M Material	S Surface Treatment	A Accessory
CCTF	EN-JL 1040 Equiv.	Black oxide or Phosphate Conversion Coat	Set Screw
CCTFM		Electroless Nickel Plating	

· Sets (Posts + Brackets)

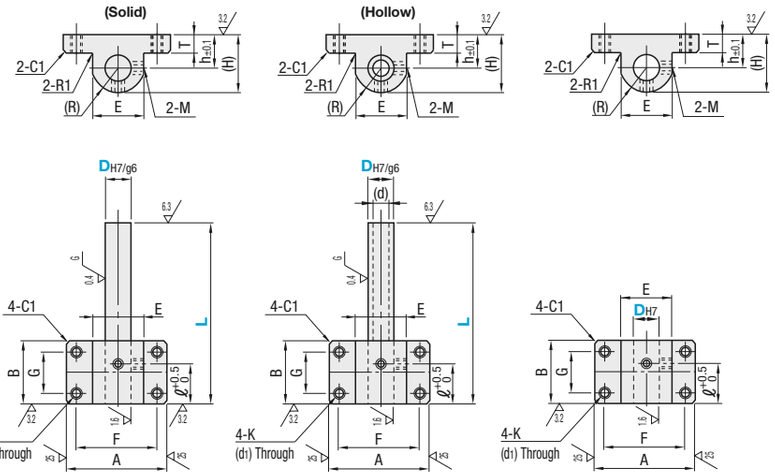

· Bracket only

Mounting holes are tapped for mounting on either front or back side.

Part Number Type		Dg6		L 1mm Increment	A	B	F	G	E	(H)	T	ℓ	h	K(d1)	(R)	M	(d)
Set (Solid) CCTN MCCTN MCCTNM	Set (Hollow) CCTA MCCTA MCCTAM	10	-0.005 -0.014	50~250	45	30	33	15	23	26	9	18	13	M5 (4.3)	13	M4	6.0
		12	-0.006 -0.017	50~300	48	33	35	18	25	28			14		14		
		15		75~350	55	35	40	20	28	31.5		20	16	M6 (5.2)	15.5	M5	10.0
	Bracket only CCTF CCTFM	20	-0.007 -0.020	75~400	65	40	50	22	36	40	9	25	20		20	M5	11.7
		25		75~450	80	48	60	25	44	49.5		30	25	M8 (6.8)	24.5	M6	15.2
		30		100~450	85		65		49	55			28		27		16.0
		35	-0.009 -0.025	125~500	105	60	80	30	59	65.5	12	40	33	M10 (8.6)	32.5	M8	20.1
		40		150~500	110		85		64	71			36		35		22.7
		50		200~600	120	70	95	40	74	81		50	41		40	M10	30.8

CCTFM is available up to D40.

Ordering Example: Part Number - L
CCTN20 - 350
CCTFM35

Sets (Posts + Brackets)

D	L	Unit Price Solid CCTN	MCCTN	MCCTNM	Hollow CCTA	MCCTA	MCCTAM
10	50~150						
	151~250						
12	50~150						
	151~300						
15	75~200						
	201~350						
20	75~200						
	201~400						
25	75~200						
	201~450						
30	100~200						
	201~450						
35	125~300						
	301~500						
40	150~300						
	301~500						
50	200~300						
	301~600						

Bracket only

D	Unit Price CCTF	CCTFM
10		
12		
15		
20		
25		
30		
35		
40		
50		-

Example

When D=20

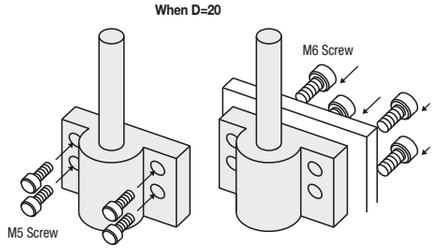

Fix to the mating side with M5 screws. (Use as through holes.)

Fix to the bracket side with M6 screws. (Use as tapped holes.)

Device Stands
Side Mounting, Standard

Features: Affordable Stands best for side mounting on transfer lines.

Sets (Posts + Brackets)

Bracket only

RoHS

Sets (Posts + Brackets)

Type Side Mounting		Post		Bracket		Accessory	
Solid	Hollow	M Material H Hardness	S Surface Treatment	M Material	S Surface Treatment	Solid	Hollow
SSTN	SSTA	EN 1.1191 Equiv. Induction Hardened	-	EN-JL 1040 Equiv.	Black oxide or Phosphate Conversion Coat	Set Screw Hex Socket Head Screw	Set Screw Hex Socket Head Screw Cap (P.2143)
MSSTN	MSSTA	EN 1.1191 Equiv.	Electroless Nickel Plating				
SSTNM	SSTAM	EN 1.1191 Equiv. Induction Hardened	Electroless Nickel Plating	EN-JL 1040 Equiv.	Electroless Nickel Plating		
MSSTNM	MSSTAM	EN 1.1191 Equiv.					
SSSTNM	-	EN 1.4301 Equiv.	-				

* Case Induction Hardened (Post): 58HRC ~, Depth 1.0 ~ 1.5
* No Electroless Nickel Plating at ends and grooves of posts.
* For Hex Socket Head Cap Screws, a black oxide bracket matches a black oxide screw, and an electroless nickel plating bracket matches a trivalent chromate screw.

Bracket only

Type	M Material	S Surface Treatment	A Accessory
SSTF	EN-JL 1040 Equiv.	Black oxide or Phosphate Conversion Coat	Set Screw
SSTFM		Electroless Nickel Plating	

· Sets (Posts + Brackets)

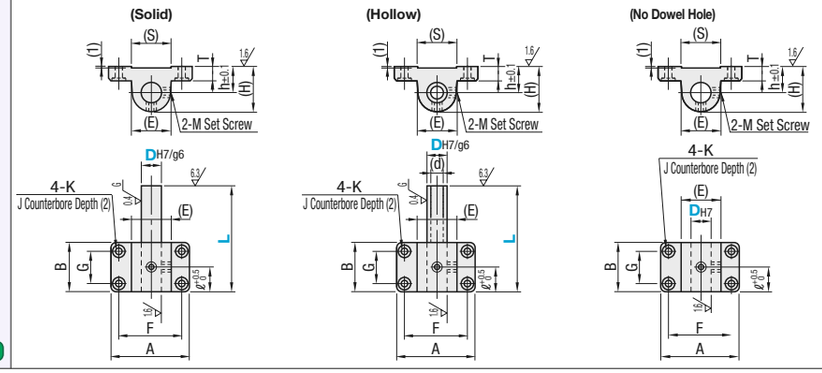

· Bracket only

Part Number Type		Dg6		L 1mm Increment	A	B	(E)	(S)	F	G	(H)	T	ℓ	h	K	(J)	M	(d)	Included Hex Socket Head Cap Screw
Set (Solid) SSTN MSSTN SSTNM MSSTNM SSSTNM	Set (Hollow) SSTA MSSTA SSTAM MSSTAM	Bracket only SSTF SSTFM	10	-0.005 -0.014	50~250	58	35	26	26	42	19	28	12	18	15	4.5	11	M4	6.0	M4-20x4 pcs.
			12	-0.006 -0.017	50~300	64	35	28	28	47	18	30			16	5.5	13			M5-20x4 pcs.
			15		75~350	72	40	31	31	52	20	33.5		20	18	6.6	15	M5	10.0	M6-25x4 pcs.
			20	-0.007 -0.020	75~400	82	45	40	40	62	25	42	12	25	22	6.6	15	M5	11.7	M6-25x4 pcs.
			25		75~450	100	60	49	49	75	36	51.5		30	27	9	18	M6	15.2	M8-25x4 pcs.
			30		100~450	106		54	54	80		57			30				16.0	
			35	-0.009 -0.025	125~500	118	80	65	65	90	40	67.5	15	40	35	11	20	M8	20.1	M10-35x4 pcs.
			40		150~500	125		70	70	95		73			38				22.7	
			50		200~600	140	100	80	80	106	50	83		50	43	14	24	M10	30.8	M12-35x4 pcs.

Ordering Example: Part Number - L
MSSTN30 - 300
SSTF20

Side Mounting Set

D	L	Unit Price Solid SSTN	MSSTN	SSTNM	MSSTNM	SSSTNM	Hollow SSTA	MSSTA	SSTAM	MSSTAM
10	50~150									
	151~250									
12	50~150									
	151~300									
15	75~200									
	201~350									
20	75~200									
	201~400									
25	75~200									
	201~450									
30	100~200									
	201~450									
35	125~300									
	301~500									
40	150~300									
	301~500									
50	200~300									
	301~600									

Bracket only

D	Unit Price SSTF	SSTFM
10		
12		
15		
20		
25		
30		
35		
40		
50		

Stand-Up Brackets
Economy / Standard

Features: Affordable Precision Casting Stand-Up Brackets

Economy Type

Type: Compact Flanged	Type: Square Flanged	M Material	S Surface Treatment	A Accessory
TLSB	KLSB	EN 1.1191 Equiv.	Black Oxide	Hex Socket Head Cap Screw
TLSM	KLSM		Electroless Nickel Plating	Hex Socket Head Cap Screw (Stainless Steel)
TLSS	KLSS	EN 1.4301 Equiv.	-	

*Hex socket head cap screws are included with D10-15 (1 pc.) and D20-50 (2 pcs.).

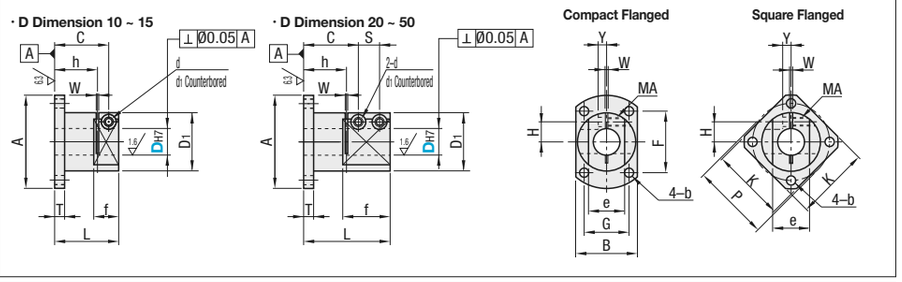

Part Number Type		DH7	A	B	L	T	D1	F	G	b	C	S	H	Y	d	d1	MA	h	f	e	W	K	P
(Compact Flanged) TLSB TLSM TLSS	(Square Flanged) KLSB KLSM KLSS	10 +0.015 0	45	28	35	10	26	30	18	4.5	29	-	9.5	3	4.5	8	M4	22	15	14	2	35	36
		12 +0.018 0	50	32			30	34	22			-	10.5	3.5						16		38	40
		15	58	38	39	12	35	38	26	5.5	32	-	12.5	4	5.5	9.5	M5	24	17	19		44	46
		20 +0.021 0	64	42	50	12	40	42	30	6.6	33.8	10.5	14	6.5	5.5	9.5	M5	27	25	24	2	50	52
		25	80	50	60		48	54	35	9	41.5	12	17	8	6.6	11	M6	34	28	29		62	64
		30	90	60	70	15	58	58	45		47	15	21	8	9	14	M8	38	34	34		68	74
		35 +0.025 0	100	66	80	15	64	66	48	11	55	16	23	11.5	9	14	M8	44	39	41	3	76	82
		40	106	72	90		70	70	54		64	17	26					53	40	46		80	88
		50	125	88	110	18	85	80	68	14	77.5	21.0	32	12	11	17.5	M10	65	48	58		94	105

For the available sizes, refer to the price list.
The tolerance and perpendicularity of DH7 are before slitting.
For mating, g6, f8 shaft tolerances are recommended. For Stand for Posts, see **P.2143** and **P.2144**. Tightening with a long wrench is recommended.

D	Unit Price: Compact Flanged TLSB	TLSM	TLSS	Square Flanged KLSB	KLSM	KLSS
10						-
12						
15				-	-	
20						
25						
30			-		-	
35			-	-	-	-
40			-	-		-
50			-		-	-

Ordering Example — Part Number: TLSB20

Standard Type

Type	M Material	S Surface Treatment	A Accessory
CLSB	EN 1.0038 Equiv.	Black Oxide	Hex Socket Head Cap Screw
CLSM		Electroless Nickel Plating	Hex Socket Head Cap Screw (Stainless Steel)
CLSAM	EN AW-6061 Equiv.	Clear Anodize	
CLSS	EN 1.4301 Equiv.	-	

Ⓒsection has deburring groove.
ⒷSome sections may have slit grooves in.
* Hex socket head cap screws are included with D10-15 (1 pc.) and D20-50 (2 pcs.).

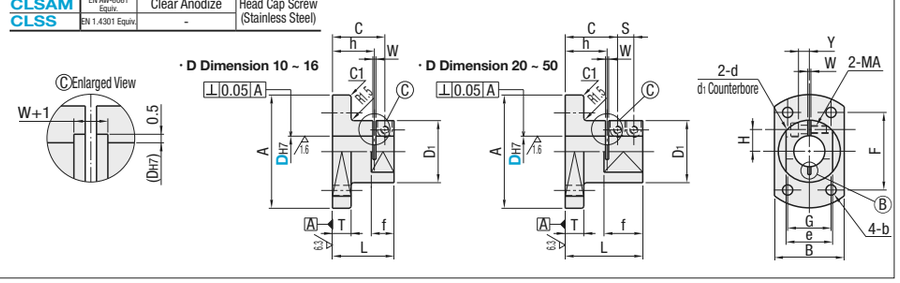

Part Number Type		DH7	A	B	L	T	D1	F	G	b	C	S	H	Y	d	d1	MA	h	f	e	W	Included Screw	Unit Price CLSB	CLSM	CLSAM	CLSS
CLSB CLSM CLSAM CLSS (D10~30)		10 +0.015 0	50	33	35	10	30	35	18	4.5	29	-	10	5	4.5	8	M4	22	15	20	2	M4-15, 1 pc.				
		12 +0.018 0	52	35			32	37	20			-	11	6						22						
		15	58	40	39	12	35	40	24	5.5	32	-	12.5		5.5	10	M5	24	17	25		M5-20, 2 pcs.			-	-
		16										-														
		20 +0.021 0	73	45	50	12	40	50	28	6.6	33.8	10.5	14	7	5.5	9.5	M5	27	25	30	2	M5-20, 2 pcs.				
		25	93	55	60		50	62	36	9	41.5	12	18	10	6.6	11	M6	34	28	35		M6-25, 2 pcs.				
		30	103	65	70	15	60	72	42		47	15	21		9	14	M8	38	34	45		M8-25, 2 pcs.				
		35 +0.025 0	108	70	80	15	65	75	45	11	55	16	24	10	9	14	M8	44	39	50	3	M8-25, 2 pcs.				-
		40	118	75	90		70	78	55		64	17	26	13				53	40	60		M8-30, 2 pcs.			-	-
		50	138	90	110	18	85	95	60	14	77.5	21	32	16	11	17.5	M10	65	48	70		M10-35, 2 pcs.				-

The tolerance and perpendicularity of DH7 are before slitting. D=16 is for CLSB and CLSM only.
For mating, g6, f8 shaft tolerances are recommended. For Stand for Posts, see **P.2143** and **P.2144**. Tightening with a long wrench is recommended.

Ordering Example — Part Number: CLSB20

Stand-Up Brackets
Cylindrical / Reversed Fastening

Features: Non-flanged compact Stand-Up Bracket. Installation footprint reduced by 30 ~ 40% compared to Standard Type.

Cylindrical

Type: Through Holes	Tapped Hole	Counterbored Hole	M Material	S Surface Treatment	A Accessory
SAYB	SBYB	SCYB	EN 1.0038 Equiv.	Black Oxide	Hex Socket Head Cap Screw
SAYM	SBYM	SCYM		Electroless Nickel Plating	Hex Socket Head Cap Screw (Stainless Steel)
SAYA	SBYA	-	EN AW-5056 Equiv.	Black Anodize	Hex Socket Head Cap Screw
SAYS	-	-	EN 1.4301 Equiv.	-	Hex Socket Head Cap Screw (Stainless Steel)

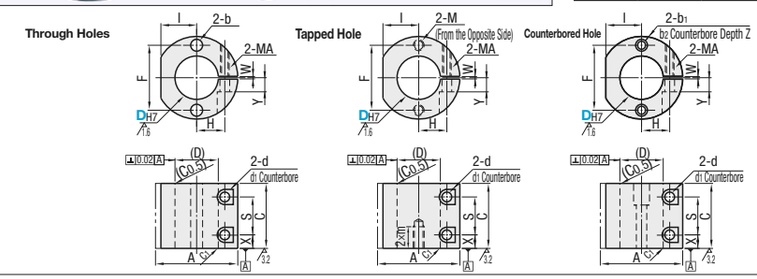

Part Number Type			DH7	A	C	F	I	H	Through Holes b	Tapped Hole m	Counterbored Hole b1	b2	Z	MA	X	S	d	d1	Y	W	Included Screw
Through Holes SAYB SAYM SAYA SAYS	Tapped Hole SBYB SBYM SBYA	Counterbored Hole SCYB SCYM	10 +0.015 0	32	19	20	12.5	10.5	5	M5	5	8	4.6	M4	5	9	5	8	5	2	M4-10, 2 pcs.
			12 +0.018 0			22.5															
			15	40	21	28	16	13	7	M6	6	9.5	5.5	M5	5.5	10	6	9.5	6		M5-15, 2 pcs.
			20 +0.021 0	45	29	34	18.5	14	7	M6	6	9.5	5.5	M5	7	15	6	9.5	7	2	M5-20, 2 pcs.
			25	55	34	40	24	18	9	M8	7	11	6.5	M6	7.5	20	7	11	10		M6-25, 2 pcs.
			30	60	44	45	27	21							9.5	25					
			35 +0.025 0	70	49	54	31	24	11	M10	9	14	9	M8	9.5	30	9	14	12	3	M8-30, 2 pcs.
			40	75	59	58	33	26							12	35			13		
			50	90	69	70	40	33	14	M12	11	17.5	11	M10	14.5	40	11	17.5	14		M10-35, 2 pcs.

The tolerance and perpendicularity of DH7 are before slitting.
For mating, g6, f8 shaft tolerances are recommended. For Stand for Posts, see **P.2143** and **P.2144**. Tightening with a long wrench is recommended.
For the available sizes, refer to the price list.

Ordering Example — Part Number: SAYB20

One Point
Shaft bore is machined before the slit is cut. This may cause a shaft bore to shrink. To expand the shaft bore, slightly screw a bolt into tapped clamped holes as shown on the figure.

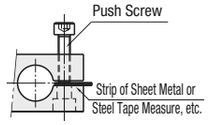

D	Unit Price: Through Holes Black Oxide SAYB	Through Holes Electroless Nickel Plating SAYM	Through Holes Black Anodize SAYA	Through Holes EN 1.4301 Equiv. SAYS	Tapped Hole Black Oxide SBYB	Tapped Hole Electroless Nickel Plating SBYM	Tapped Hole Black Anodize SBYA	Counterbored Hole Black Oxide SCYB	Counterbored Hole Electroless Nickel Plating SCYM
10							-		
12						-	-		
15									
20									
25									-
30									
35							-		
40			-				-		
50				-			-	-	

Example

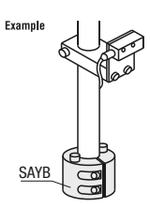

Reversed Fastening

Type: Flanged	Pilot Flanged	M Material	S Surface Treatment
PFPB	KFPB	EN 1.1191 Equiv.	Black Oxide
PFPM	KFPM		Electroless Nickel Plating
PFPSS	-	EN 1.4301 Equiv.	-

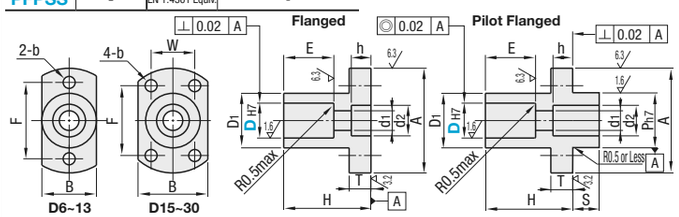

Example

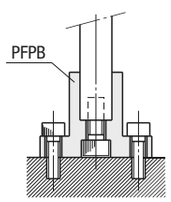

Part Number Type		DH7	A	B	H	D1	T	E	d1	d2	h	F	W	b	Ph7	S	Post Mounting	Unit Price PFPB	PFPM	PFPSS	KFPB	KFPM
(Flanged) PFPB PFPM PFPSS	(Piloted Flanged) KFPB KFPM	6	28	12	16	12	5	5	9	3.5	6.5	3.5	20	-	3.5	12	5	M3			-	-
		8	32	15	22	15			12	4.5	8	4.5	24	-	4.5	15		M4			-	
		10	38	18	26	18	8	15	5.5	9.5	5.5	30	-			18		M5			-	-
		12	42	20	32	20	8	18	6.6	11	6.5	32	-	5.5	20	5	M6					
		13																			-	-
		15	48	32	40	25	10	23	9	14	9	32	20	5.5	25	5	M8				-	
		16																				
		20	55	38	50	30	10	31	11	18	11	35	25	6.6	30	5	M10					
		25	75	50	62	38	15	38	14	20	14	45	35	9	38		M12					
		30	80	55	75	45		45	18	26	18	50	40		45		M16					

Ordering Example — Part Number: PFPB8

Stand-Up Brackets

Square Standard, Square Right / Left Reversed

Features: Secure mounting with square shape bases.

Standard

RoHS

Type: Counterbored Hole	Type: Tapped Hole	M Material	S Surface Treatment	A Accessory
SAQB	SBQB	General Structural Steel	Black Oxide	Hex Socket Head Cap Screw
SAQM	SBQM		Electroless Nickel Plating	Hex Socket Head Cap Screw (Stainless Steel)
SAQS	-	EN 1.4301 Equiv.	-	

Accessory: CB screws (P.2-171) are included with black oxide products, and SCB screws (P.2-173) are included with electroless nickel plated products.

Counterbored Hole

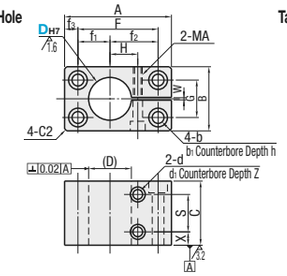

Tapped Hole

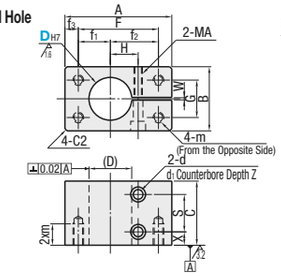

25 (3.2 1.6)

Right / Left Reversed

RoHS

Type: Counterbored Hole	Type: Tapped Hole	M Material	S Surface Treatment	A Accessory
SAQBK	SBQBK	General Structural Steel	Black Oxide	Hex Socket Head Cap Screw
SAQMK	-		Electroless Nickel Plating	Hex Socket Head Cap Screw (Stainless Steel)

Accessory: CB screws (P.2-171) are included with black oxide products, and SCB screws (P.2-173) are included with electroless nickel plated products.

Counterbored Hole

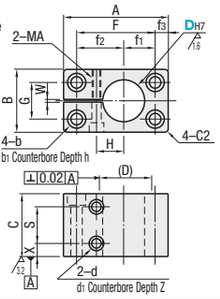

Tapped Hole

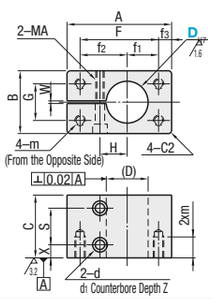

25 (3.2 1.6)

Standard

Part Number Type	DH7	A	B	C	F	f1	f2	f3	G	b	b1	h	m	H	MA	X	S	d	d1	Z	W	Included Screw
Counterbored Hole SAQB SAQM SAQS / Tapped Hole SBQB SBQM	10 (+0.015 0)	40	20	19	28	9	19	6	11	5	8	4.6	M4	9	M4	4.75	9.5	5	8	4.6	2	M4-15, 2 pcs.
	12 (+0.018 0)	42			30	10	20							10								
	15	50	22	21	38	14	24		12	6	9.2	5.5	M5	12	M5	5.5	10	6	9.5	5.5		M5-15, 2 pcs.
	20 (+0.021 0)	60	30	29	45	17.5	27.5	7.5	16	7	11	6.5	M6	15	M6	7	15	7	11	6.5		M6-20, 2 pcs.
	25	65	35	34	50	20	30		20					17			20					M6-25, 2 pcs.
	30	80	45	44	60	22.5	37.5	10	25	9	14	9	M8	21	M8	9.5	25	9	14	9		M8-30, 2 pcs.
	35 (+0.025 0)	85	50	49	65	25	40		30					24			30				3	M8-35, 2 pcs.
	40	100	60	59	75	30	45	12.5	35	11	17.5	11	M10	26		12	35					M8-40, 2 pcs.
	50	110	70	69	85	32.5	52.5		45					33	M10	14.5	40	11	17.5	11		M10-50, 2 pcs.

The tolerance and perpendicularity of DH7 are before slitting.
For mating, g6, f8 shaft tolerances are recommended. For Stand for Posts, see **P.2143** and **2144**. Tightening with a long wrench is recommended.

Right / Left Reversed

Part Number Type	DH7	A	B	C	F	f1	f2	f3	G	b	b1	h	m	H	MA	X	S	d	d1	Z	W	Included Screw
Counterbored Hole SAQBK SAQMK / Tapped Hole SBQBK	10 (+0.015 0)	40	20	19	28	9	19	6	11	5	8	4.6	M4	9	M4	4.75	9.5	5	8	4.6	2	M4-15, 2 pcs.
	12 (+0.018 0)	42			30	10	20							10								
	15	50	22	21	38	14	24		12	6	9.2	5.5	M5	12	M5	5.5	10	6	9.5	5.5		M5-15, 2 pcs.
	20 (+0.021 0)	60	30	29	45	17.5	27.5	7.5	16	7	11	6.5	M6	15	M6	7	15	7	11	6.5		M6-20, 2 pcs.
	25	65	35	34	50	20	30		20					17			20					M6-25, 2 pcs.
	30	80	45	44	60	22.5	37.5	10	25	9	14	9	M8	21	M8	9.5	25	9	14	9		M8-30, 2 pcs.
	35 (+0.025 0)	85	50	49	65	25	40		30					24			30				3	M8-35, 2 pcs.
	40	100	60	59	75	30	45	12.5	35	11	17.5	11	M10	26		12	35					M8-40, 2 pcs.
	50	110	70	69	85	32.5	52.5		45					33	M10	14.5	40	11	17.5	11		M10-50, 2 pcs.

The tolerance and perpendicularity of DH7 are before slitting.
For mating, g6, f8 shaft tolerances are recommended. For Stand for Posts, see **P.2143** and **2144**. Tightening with a long wrench is recommended.

Standard

D	Unit Price: Counterbored Hole SAQB	SAQM	SAQS	Tapped Hole SBQB	SBQM
10		-		-	-
12			-		-
15					
20					
25					
30					
35			-		
40			-		
50			-		

Right/Left Reversed

D	Unit Price: Counterbored Hole SAQBK	SAQMK	Tapped Hole SBQBK
10			
12			
15			
20			
25			
30			
35			
40			
50			

Ordering Example — Part Number: SAQB20, SBQBK30

Stand-Up Brackets

Square Compact / Non-Flanged Side Mounting

Features: Installation footprint reduced by an average 28% compared to Square Standard (previous page).

Compact

RoHS

Type: Counterbored Hole	Type: Tapped Hole	M Material	S Surface Treatment	A Accessory
CAQB	CBQB	General Structural Steel	Black Oxide	Hex Socket Head Cap Screw
CAQM	CBQM		Electroless Nickel Plating	Hex Socket Head Cap Screw (Stainless Steel)

Accessory: CB screws (P.2-171) are included with black oxide products, and SCB screws (P.2-173) are included with electroless nickel plated products.

25 (3.2 1.6)

Counterbored Hole

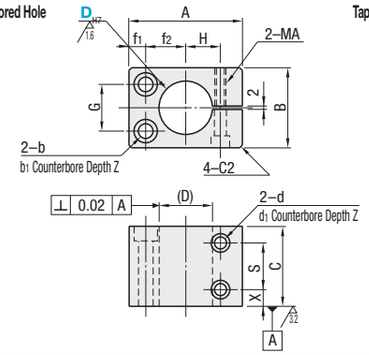

Tapped Hole

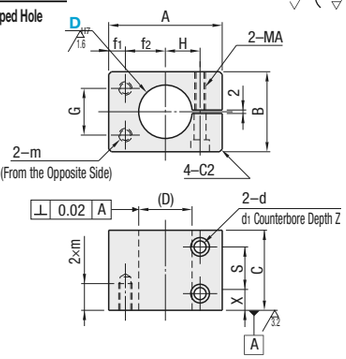

Part Number Type	DH7	A	B	C	f1	f2	G	b	b1	m	H	MA	X	S	d	d1	Z	Unit Price CAQB	CBQB	CAQM	CBQM
Counterbored Hole CAQB CAQM / Tapped Hole CBQB CBQM	10 (+0.015 0)	30	20	19	6	9	11	5	8	M4	9	M4	4.75	9.5	5	8	4.6				
	12 (+0.018 0)	32				10					10										
	15	39				14				M5	12										
	20 (+0.021 0)	48	28	27	7.5	17.5	16	7	11	M6	15	M6	7	13	7	11	6.5				
	25	52	32	31		20	17				17			17							
	30	63	40	39	10	22.5	20	9	14	M8	21	M8	9.5	20	9	14	9		-		

The tolerance and perpendicularity of DH7 are before slitting. D=30 of CBQB is not available. For mating, g6, f8 shaft tolerances are recommended. For Stand for Posts, see **P.2143** and **P.2144**. Tightening with a long wrench is recommended.

Ordering Example — Part Number: CAQB20

Example

Compact Type

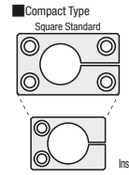

Square Compact
Installation footprint reduced by an average of 28%.

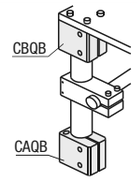

Features: Installation footprint reduced by an average of 52% compared to the conventional products on **P.2157**.

Non-Flanged Side Mounting

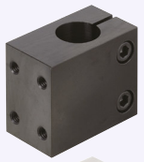

RoHS

Type	M Material	S Surface Treatment	A Accessory
CLHB	General Structural Steel	Black Oxide	Hex Socket Head Cap Screw
CLHNM		Electroless Nickel Plating	Hex Socket Head Cap Screw (Stainless Steel)
CLHBM	Aluminum Alloy	Black Anodize	Hex Socket Head Cap Screw
CLHAM		Clear Anodize	Hex Socket Head Cap Screw (Stainless Steel)
CLHS	EN 1.4301 Equiv.	-	

Accessory: CB screws (P.2-171) are included with black oxide/black anodized products, and SCB screws (P.2-173) are included with the other products, respectively.

25 (6.3 1.6)

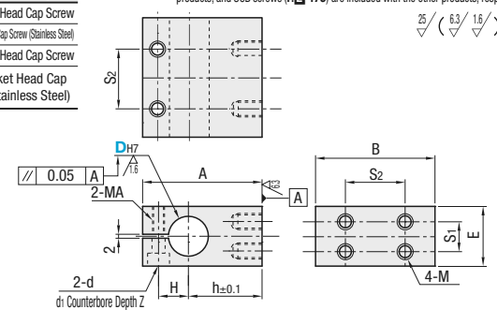

Part Number Type	DH7	A	B	M	S1	S2	h	H	E	d	d1	Z	MA	Included Screw	Unit Price CLHB	CLHNM	CLHBM	CLHAM	CLHS
CLHB CLHNM CLHBM CLHAM CLHS	10 (+0.015 0)	35	35	M4	10	18	18	10.5	16	5	8	4.5	M4	M4-20, 2 pcs.			-	-	-
	12 (+0.018 0)	38		M5	12		20	11.5	19	5.5	9.5	5.5	M5	M5-25, 2pcs.			-	-	-
	15	45	40	M6	13	20	25	12.5	23	6.6	11	6.5	M6	M6-35, 2pcs.			-	-	-
	20 (+0.021 0)	53	45		18	25	30	15	30					M6-40, 2pcs.					
	25	59	60	M8	17	36	33	18	35					M6-45, 2pcs.					
	30	67			29		37	21	45	9	14	9	M8	M8-50, 2pcs.					

The tolerance and perpendicularity of DH7 are before slitting. For mating, g6, f8 shaft tolerances are recommended. For Stand for Posts, see **P.2143** and **2144**. Tightening with a long wrench is recommended.
D=20 ~ 30 are only for CLHBM, CLHAM and CLHS.

Ordering Example — Part Number: CLHB20, CLHBM30

Example

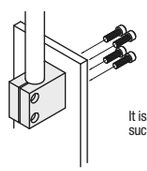

It is useful when tapping is difficult due to weak attachment plates, such as plastic plates or thin plates.

Stand-Up Brackets

Side Mounting / Side Mounting, Dowel Hole / Side Mounting, Compact

Features: Easy mounting on transfer lines.

Side Mounting

Side Mounting, Dowel Hole

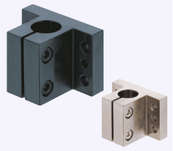

RoHS

Type		M Material	S Surface Treatment	A Accessory	
Side Mounting	Side Mounting, Dowel Hole			Side Mounting	Side Mounting, Dowel Hole
CLTB	CLPK	Steel for General Structure	Black Oxide	Hex Socket Head Cap Screw	Hex Socket Head Set Screw Dowel Pin
CLTM	CLPM		Electroless Nickel Plating	Hex Socket Head Cap Screw (Stainless Steel)	Hex Socket Head Cap Screw (Stainless Steel) Dowel Pin
CLTBM	-	Aluminum Alloy	Black Anodize	Hex Socket Head Cap Screw	-
CLTAM	-		Clear Anodize	Hex Socket Head Cap Screw (Stainless Steel)	
CLTS	-	EN 1.4301 Equiv.	-		

Accessory: CB screws (P.2-171) are included with black oxide/black anodized products, and SCB screws (P.2-173) are included with the other products, respectively.Dowel pins (P.2-255) are included with the product with dowel holes.

Included Dowel Pins

DH7	Accessory: Dowel Pin
20	MSTM6-20
25	MSTM8-20
30	
35	MSTM10-30
40	
50	

Side Mounting

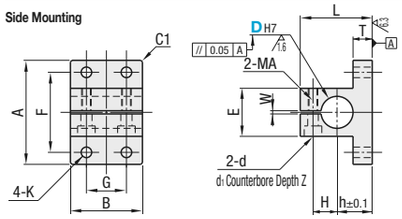

Side Mounting, Dowel Hole

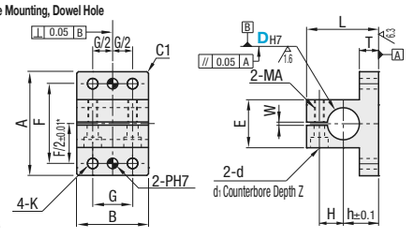

* Tolerance of ±0.01 is only applicable to hole pitch tolerance of dowel holes and not applicable to through holes.

Part Number Type	DH7		A	B	L	T	F	G	K	h	H	E	d	d1	Z	MA	W	PH7	Tolerance	Included Screw	Unit Price Side Mounting CLTB	CLTM	CLTBM	CLTAM	CLTS	Side Mounting, Dowel Hole CLPK	CLPM
Side Mounting / Side Mounting, Dowel Holes	10	+0.015 0	40	35	32	10	30	18	4.4	15	10.5	20	5	8	4.5	M4	2	-	-	M4-15, 2 pcs.						-	-
	12	+0.018 0	44				34		5.5	14	11.5	22	5.5	9	5.5	M5				M5-15, 2 pcs.						-	-
	15		50	40	38	12	38	20	6.6	18	12.5	25	6.6	11	6.5	M6				M6-15, 2 pcs.						-	-
	16																			M6-15, 2 pcs.			-			-	-
CLTB CLTM CLTBM CLTAM CLTS / CLPK CLPM	20	+0.021 0	65	45	45	12	50	25	6.6	22	15	30	6.6	11	6.5	M6	2	6	+0.012 0	M6-20, 2 pcs.							
	25		80	60	53		60	36	9	27	18	35						8	+0.015 0	M6-25, 2 pcs.							
	30		90		60	15	70			30	21	45	9	14	9	M8				M8-35, 2 pcs.							
	35	+0.025 0	105	80	68	15	80	40	11	35	24	50	9	14	9	M8	3	10		M8-40, 2 pcs.					-		
	40		115		76		90			38	27	60	11	17.5	11	M10				M10-45, 2 pcs.					-		
	50		135	100	87	18	105	50	14	43	33	70								M10-50, 2 pcs.					-		

The tolerance and perpendicularity of DH7 are before slitting.
For mating, g6, f8 shaft tolerances are recommended. For Stand for Posts, see **P.2143** and **P.2144**. Tightening with a long wrench is recommended.
CLTS is applicable up to D=30, and CLPK and CLPM are available from D=20 and up. ⊗D=16 of CLTBM is not available.

Ordering Example

Part Number
CLTB35
CLPM30

Features: Compact Stand-Up Brackets 25 ~ 30% shorter in height, and approximately 10% narrower in width compared to standard Side Mounting Type (**P.2157**).

Side Mounting, Compact

RoHS

Type	M Material	S Surface Treatment	A Accessory
CLCB	Steel for General Structure	Black Oxide	Hex Socket Head Cap Screw
CLCNM		Electroless Nickel Plating	Hex Socket Head Cap Screw (Stainless Steel)
CLCBM	Aluminum Alloy	Black Anodize	Hex Socket Head Cap Screw
CLCAM		Clear Anodize	Hex Socket Head Cap Screw (Stainless Steel)
CLCS	EN 1.4301 Equiv.	-	

Accessory: CB screws (P.2-171) are included with black oxide/black anodized products, and SCB screws (P.2-173) are included with the other products, respectively.

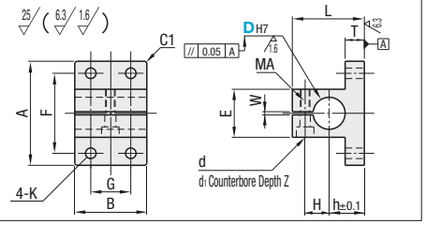

Part Number Type	DH7		A	B	L	T	F	G	K	h	H	E	d	d1	Z	MA	W	Included Screw	Unit Price CLCB	CLCNM	CLCBM	CLCAM	CLCS
CLCB CLCNM CLCBM CLCAM CLCS (D20~30)	20	+0.021 0	60	30	45	12	45	18	6.6	22	15	30	6.6	11	6.5	M6	2	M6-12, 1 pc.					
	25		73	45	53		54	30	9	27	18	35						M6-25, 1 pc.					
	30		83		60	15	64			30	21	45	9	14	9	M8	2	M8-35, 1 pc.					
	35	+0.025 0	94	60	68		72	35	11	35	24	50						M8-40, 1 pc.					-
	40		104		76		82			38	27	60	11	17.5	11	M10	3	M10-45, 1 pc.					-
	50		118	75	87	18	94	45	14	43	33	70						M10-50, 1 pc.					-

The tolerance and perpendicularity of DH7 are before slitting.
For mating, g6, f8 shaft tolerances are recommended. For Stand for Posts, see **P.2143** and **P.2144**. Tightening with a long wrench is recommended.

Ordering Example

Part Number
CLCB35

Stand-Up Brackets

Side Mounting, Casting, Dowel Holes / Slotted Holes

Features: Up to 67% price reduction by cast-producing compared to the standard products (left-hand page).

Side Mounting, Casting

Side Mounting, Casting, Dowel Holes

RoHS

Type		M Material	S Surface Treatment	A Accessory	
Side Mounting, Casting	Side Mounting, Casting, Dowel Holes			Side Mounting, Casting,	Side Mounting, Casting, Dowel Holes
CLTBD	CLPBD	EN-JS 1040 Equiv.	Black Oxide or Phosphate Conversion Coating	Hex Socket Head Cap Screw	Hex Socket Head Set Screw Dowel Pin
CLTMD	CLPMD		Electroless Nickel Plating	Hex Socket Head Cap Screw (Stainless Steel)	Hex Socket Head Cap Screw (Stainless Steel) Dowel Pin

Accessory: CB screws (P.2-171) are included with black oxide or phosphate conversion coated products, and SCB screws (P.2-173) are included with electroless nickel plated products.Dowel pins (P.2-255) are included with the product with dowel holes.

Side Mounting, Casting

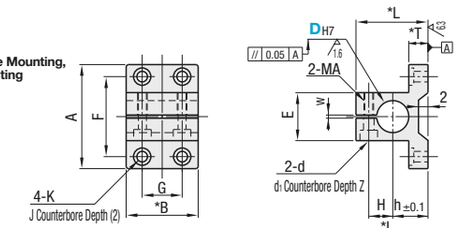

Side Mounting, Casting, Dowel Holes

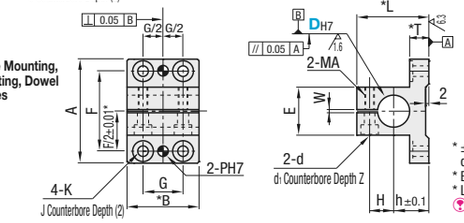

Tolerance of Cast Products
A, B, L, E and T dimensions are for casting tolerance.

Casting Tolerance Class CT12 for JISB0403

over	or Less	Tolerance
10	16	±2.2
17	25	±2.3
26	40	±2.5
41	63	±2.8
64	100	±3.0
101	160	±3.5

Included Dowel Pins

DH7	Accessory: Dowel Pin
20	MSTM6-20
25	MSTM8-20
30	
35	MSTM10-30
40	
50	

* ±0.01 of F/2 part is only applicable to hole pitch tolerance of dowel holes and not applicable to through holes.
* B ends are milled for aesthetics.
* L and T have 2 degrees of draft for cast-mold extraction.

Antirust oil is applied with black oxide or phosphate conversion coating and electroless nickel plating finish.

Part Number Type	DH7		A	B	L	T	G	F	J	h	H	E	d	d1	Z	MA	W	With Dowel Holes PH7	Tolerance	Included Screw	Unit Price Side Mounting, Casting CLTBD	CLTMD	Side Mounting, Casting, Dowel Holes CLPBD	CLPMD
Side Mounting, Casting, / Side Mounting, Casting, Dowel Holes CLTBD CLTMD CLPBD CLPMD	20	+0.021 0	65	45	45	12	50	25	6.6	13	22	15	30	6.6	11	6.5	M6	2	6	+0.012 0	M6-20, 2 pcs.				
	25		80	60	53		60	36	9	18	27	18	35						8	+0.015 0	M6-25, 2 pcs.				
	30		90		60	15	70				30	21	45	9	14	9	M8				M8-35, 2 pcs.				
	35	+0.025 0	105	80	68		80	40	11	20	35	24	50					3	10		M8-40, 2 pcs.			-	-
	40		115		76		90				38	27	60	11	17.5	11	M10				M10-45, 2 pcs.			-	-
	50		135	100	87	18	105	50	14	24	43	33	70								M10-50, 2 pcs.			-	-

The tolerance and perpendicularity of DH7 are before slitting.
For mating, g6, f8 shaft tolerances are recommended. For Stand for Posts, see **P.2143** and **P.2144**. Tightening with a long wrench is recommended.
D=30 or less are applicable to CLPBD and CLPMD.

Ordering Example

Part Number
CLTBD20
CLPMD30

Side Mounting, Slotted Holes

RoHS

Type	M Material	S Surface Treatment	A Accessory
CLNB	Steel for General Structure	Black Oxide	Hex Socket Head Cap Screw
CLNM		Electroless Nickel Plating	Hex Socket Head Cap Screw (Stainless Steel)
CLNA	Aluminum Alloy	Clear Anodize	
CLNS	EN 1.4301 Equiv.	-	

Accessory: For CLNB, CB Screws (P.2-171), for others, SCB Screws (P.2-173)

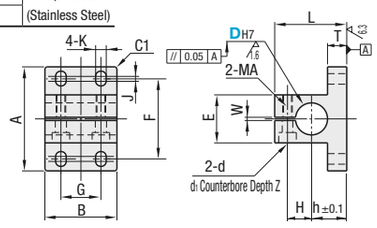

Part Number Type	DH7		A	B	L	T	G	F	J	K	h	H	E	d	d1	Z	MA	W	Included Screw	Unit Price CLNB	CLNM	CLNA	CLNS
CLNB (D20~30, 40) CLNM (D20~50) CLNA (D20, 25, 50) CLNS (D20, 25)	20	+0.021 0	65	45	45	12	25	47.5	5.5	6.6	22	15	30	6.6	11	6.5	M6	2	M6-20, 2 pcs.				
	25		80	60	53		36	57.5	7.5	9	27	18	35						M6-25, 2 pcs.				
	30		90		60			67.5			30	21	45						M8-35, 2 pcs.			-	-
	35	+0.025 0	105	80	68	15	40	77.5	9.5	11	35	24	50	9	14	9	M8	3	M8-40, 2 pcs.	-		-	-
	40		115		76			87.5			38	27	60	11	17.5	11	M10		M10-45, 2 pcs.			-	-
	50		135	100	87	18	50	102.5	12.5	14	43	33	70						M10-50, 2 pcs.	-			-

The tolerance and perpendicularity of DH7 are before slitting.
For mating, g6, f8 shaft tolerances are recommended. For Stand for Posts, see **P.2143** and **P.2144**. Tightening with a long wrench is recommended.

Ordering Example

Part Number
CLNB25
CLNA20

Posts for Stands

Square Bars, Square Tubes - Length Configurable with Scale

Features: Use in sets with Stand-Up Brackets and Strut Clamps can prevent sensors and cameras from rotating during setup changes. (Stand-Up Brackets P.2160, Strut Clamps P.2181, 2182)

Square Bars, Square Tubes

Type		Material
Solid	Hollow	
STNQ	STAQ	EN 1.4301 Equiv.

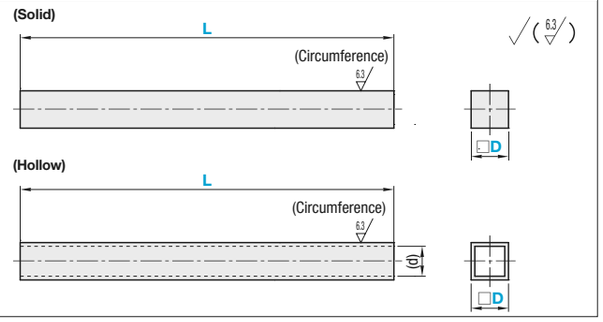

Part Number Type	D		L 1mm Increment	(d)	Unit Price STNQ L40~200	STNQ L201~400	STNQ L401~800	STAQ L40~200	STAQ L201~400	STAQ L401~800
STNQ STAQ	10	0 -0.1	40~600	8						
	12		40~600	10						
	15		40~600	13						
	20	0 -0.12	40~800	17.6						
	25		40~800	22.6						

* D10 ~ 15 are available up to L600.

Ordering Example

Part Number	-	L
STNQ12	-	200
STAQ20	-	300

Features: Square Tubes with a scale (w/o numbers), length can be specified in 1mm increments.

Square Tubes Length Configurable with Scale

Type	Material
FGSTAQ	EN 1.4301 Equiv.

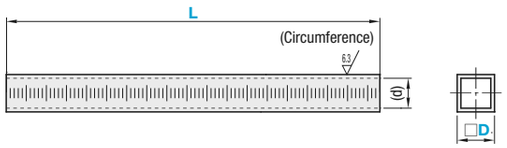

If wiped with volatile oil, the prints may fade.

Scale is without numbers.
Use the scale as a reference.

Part Number Type	D		L 1mm Increment	(d)	Unit Price L40~200	L201~400	L401~800
FGSTAQ	10	0 -0.1	40~600	8			
	12		40~600	10			
	15		40~600	13			
	20	0 -0.12	40~800	17.6			
	25		40~800	22.6			

* D10 ~ 15 are available up to L600.

Ordering Example

Part Number	-	L
FGSTAQ15	-	200

Example

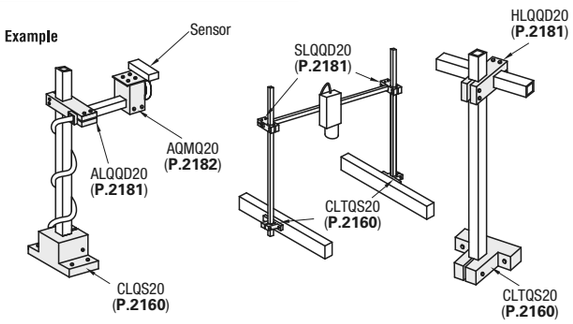

Stand-Up Brackets - Square Hole

Standard / Side Mounting Holes

Features: By using in sets with Square Tubes and Strut Clamps, sensors and cameras can be prevented from rotating during setup changes. Accessory: For Posts for Stands used in sets, refer to P.2159

Standard

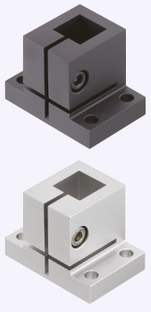

Type	Material	Surface Treatment	Accessory
CLQB	EN 1.0038 Equiv.	Black Oxide	Hex Socket Head Cap Screw
CLQNM		Electroless Nickel Plating	Hex Socket Head Cap Screw (Stainless Steel)
CLQBM	EN AW-6061 Equiv.	Black Anodize	Hex Socket Head Cap Screw
CLQAM		Clear Anodize	Hex Socket Head Cap Screw
CLQS	EN 1.4301 Equiv.	-	(Stainless Steel)

Accessory: CB screws (P.2-171) are included with black oxide/black anodized products, and SCB screws (P.2-173) are included with the other products, respectively.

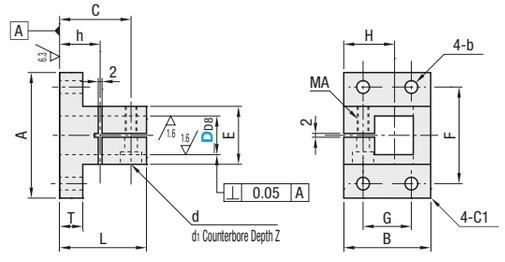

Part Number Type	DD8		A	B	L	T	E	F	G	b	C	H	d	d1	Z	MA	h	Unit Price CLQB	CLQNM	CLQBM	CLQAM	CLQS
CLQB CLQNM CLQBM CLQAM CLQS	10	+0.077 +0.050	38	24	24	7	20	30	14	4.5	17.5	15	4.5	8	4.5	M4	10					
	12											16										
	15		48	32	36	9	26	38	20	5.5	24	19	5.5	9.5	5.5	M5	12					
	20	+0.098 +0.065	52	36	40	10	30	42	24		26.5	21					13					
	25		62	45	48	12	35	48	28	6.5	32	28	6.5	11	6.5	M6	15					

The tolerance and perpendicularity of DD8 are before slitting.
Recommended Tolerances of mating shafts: 0 ~ -0.12. For Stand for Posts, see P.2159. Tightening with a long wrench is recommended.

Side Mounting Holes

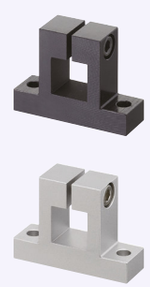

Type	Material	Surface Treatment	Accessory
CLTQB	EN 1.0038 Equiv.	Black Oxide	Hex Socket Head Cap Screw
CLTQNM		Electroless Nickel Plating	Hex Socket Head Cap Screw (Stainless Steel)
CLTQBM	EN AW-6061 Equiv.	Black Anodize	Hex Socket Head Cap Screw
CLTQAM		Clear Anodize	Hex Socket Head Cap Screw
CLTQS	EN 1.4301 Equiv.	-	(Stainless Steel)

Accessory: CB screws (P.2-171) are included with black oxide/black anodized products, and SCB screws (P.2-173) are included with the other products, respectively.

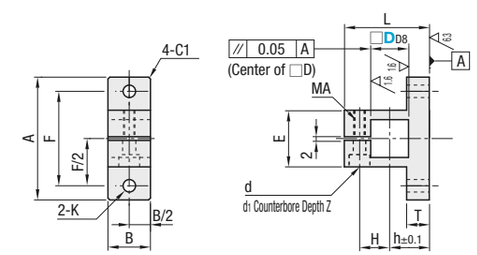

Part Number Type	DD8		A	B	L	T	F	K	h	H	E	d	d1	Z	MA	Unit Price CLTQB	CLTQNM	CLTQBM	CLTQAM	CLTQS
CLTQB CLTQNM CLTQBM CLTQAM CLTQS	10	+0.077 +0.050	38	11	29	7	30	4.5	14	10	20	4.5	8	4.5	M4					
	12				30					11										
	15		48	15	36	9	38	5.5	18	13	26	5.5	9.5	5.5	M5					
	20	+0.098 +0.065	52	20	40	10.5	42		19	16	30									
	25		73	24	54	12	54	6.5	25	20	35	6.5	11	6.5	M6					

The tolerance and perpendicularity of DD8 are before slitting.
Recommended Tolerances of mating shafts: 0 ~ -0.12. For Stand for Posts, see P.2159. Tightening with a long wrench is recommended.

Ordering Example

Part Number
CLQBM15
CLTQS20

Example

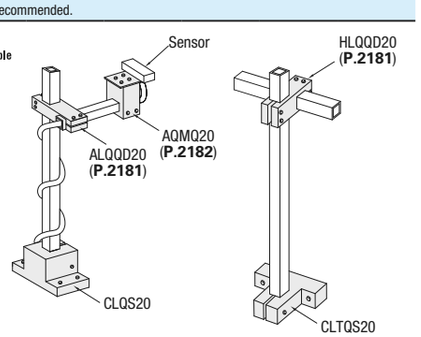

Strut Clamps
Overview

■Strut Clamp Type Selection Chart

Type			Shape		Features	Fastening	Page: Round Hole	Page: Square Hole
Perpendicular		Strut Clamps used to cross two posts	Round Equal Dia., Perpendicular Configuration	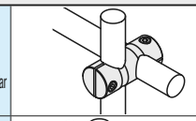	Round type enabling easy clamping and reducing costs	Screw Fastening	P.2163	-
			Standard	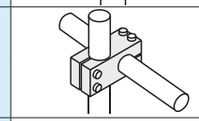	Most popular Pitch Configurable Type also included in product lineup	Knob / Clamp Lever	P.2166	-
						Screw Fastening	P.2164-2169	P.2181
			Split	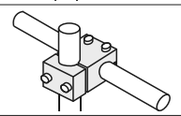	Post-assembly mounting onto posts built-in structures	Screw Fastening	P.2171	-
			T-Shaped Split	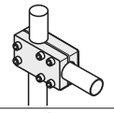	Space-saving one-sided post	Screw Fastening	P.2171	-
			Rotation	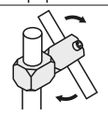	Post angles adjustable	Screw Fastening	P.2173 P.2174	-
Parallel		Two parallel posts fixable	Standard	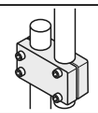	Parallel posts fixed	Screw Fastening	P.2172	-
Tapped	Vertical	Direct device mounting via tapped holes	Standard	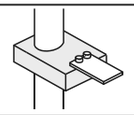	Vertical device mounting on posts	Knob / Clamp Lever	P.2175 P.2176	-
						Screw Fastening	P.2177	P.2182
			Split	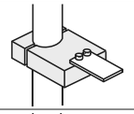	Post-assembly mounting onto posts in structures Used for mounting objects perpendicular to posts	Screw Fastening	P.2179	-
	Parallel		Standard	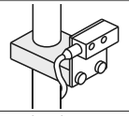	Horizontal device mounting onto post	Knob / Clamp Lever	P.2175 P.2176	-
						Screw Fastening	P.2178	P.2182
			Split	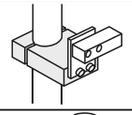	Post-assembly mounting onto posts in structures Used for mounting objects parallel to posts	Screw Fastening	P.2179	-
Arm / Bar		Mounting onto perpendicular strut clamps as guides	Arm	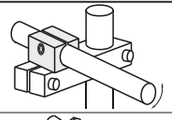	Post in circumferential rotations via arm mounted onto Strut Clamps	Screw Fastening	P.2184	-
			Bar	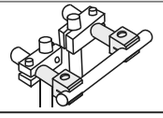	Round Bar as Conveyor Guides		P.2184	-
Adjustment Mechanism		By mounting below the clamp, fine manual adjustments are possible up to 5mm.	Adjustment Mechanism	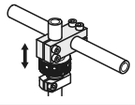	By mounting below the clamp, fine manual adjustments of cameras and beam sensors are possible.	Screw Fastening	P.2170	-

* Products of the same shape include various sizes such as Standard Type and Compact Type. See each product page for details.
* Strut Clamps with Knob and Clamp Lever are suitable for frequent setup changes through manual fastening.

Round Strut Clamp
Overview

■Features of Round Strut Clamp

[Round]

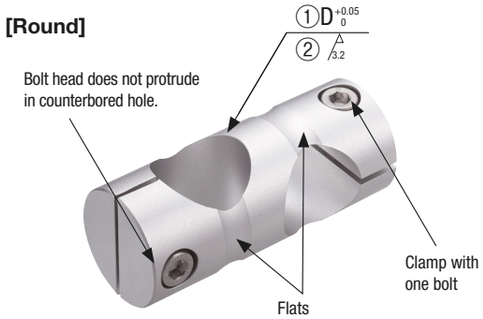

[Similar Parts: Square Type]

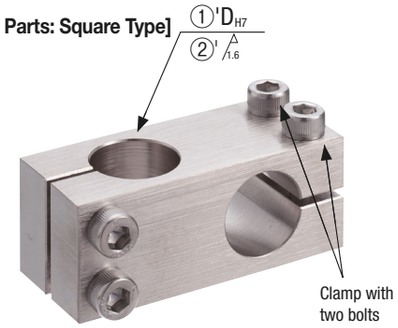

Point ❶ Modified in Specification to meet Clamp use in Middle Accuracy, and realized Lower Costs by changing the Manufacturing Process

[Round]

① Shaft bore tolerance	0~+0.05
② Shaft Bore Surface Roughness	Ra3.2
⇒ Fitting Accuracy between Shaft and Shaft Bore	Middle Accuracy

For mating, g6 ~ f8 shaft tolerances are recommended.

[Similar Parts: Square Type]

①' Shaft bore tolerance	H7
②' Shaft Bore Surface Roughness	Ra1.6
⇒ Fitting Accuracy between Shaft and Shaft Bore	High Accuracy

For mating, g6 shaft tolerance is recommended.

⇒ Maximum of 44% Price Reduction compared to Similar Parts (Square Type)

Point ❷ Re-design of the shape and standards to more easily Clamping Post

A round type is free from the corner's thickness, as opposed to similar parts (square type), and is easily clamped with the flats provided around the shaft bore.

So,
a round strut clamp is capable of providing a firm clamp force even with one bolt to ensure highly efficient workability!!

■Maximum Load Test

Tighten shafts and strut clamps by standard tightening torque [N·m], and conduct a maximum load test to observe the moment that the shaft and strut clamp start to move.

		Round Max. Load (kN)	Square Max. Load (kN)
		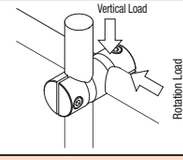	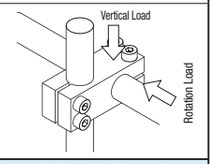
EN 1.1191 Equiv. Shaft Bore Dia. Ø20	Bolt Type	M5-20 (Single Clamp)	M6-25 (Double Clamps)
	Vertical Load	12.63	13.12
	Rotation Load	0.96	0.97
Aluminum Alloy Shaft Bore Dia. Ø10	Bolt Type	M4-10 (Single Clamp)	M5-15 (Single Clamp)
	Vertical Load	10.59	8.26
	Rotation Load	0.72	0.58

⇒ **Equiv. to square type, or provides more clamp force**

Maximum Load (kN) values shown are for reference only, and not guaranteed ones.

Point ❸ Selection of 3 Steps: Material, Surface Treatment, and Shaft Hole Dia.! A total of 28 standards is offered for selection.

Shaft Bore Dia.	C-KDST (EN 1.1191 Equiv. + Black Oxide)	C-MDKT (EN 1.1191 Equiv. + Electroless Nickel Plating)	C-ALKD (Aluminum Alloy + Black Anodize)	C-HLKD (Aluminum Alloy + Clear Anodize)
6	-		●	
8	●		●	
10	●		●	
12	●		●	
15	●		●	
20	●		●	
25	●		●	
30	●		-	

For details about round strut clamps, refer to P.2163

Round Strut Clamp

Application for design registration

Equal Dia., Perpendicular Configuration

Features: Round strut clamp with highly efficient workability, capable of easy clamping by providing flats around the shaft bore. Maximum of 44% price reduction is possible compared to similar products (on the right page).

Equal Dia., Perpendicular Configuration

Type	Material	Surface Treatment	Accessory
C-KDST	EN 1.1191 Equiv.	Black Oxide	Hex Socket Head Cap Screw (Black Oxide)
C-MDKT		Electroless Nickel Plating	Hex Socket Head Cap Screw (Stainless Steel)
C-ALKD	Aluminum Alloy	Black Anodize	Hex Socket Head Cap Screw (Black Oxide)
C-HLKD		Clear Anodize	Hex Socket Head Cap Screw (Stainless Steel)

CB screws are included with the black oxide and black anodized products, and SCB screws are included with the other products.

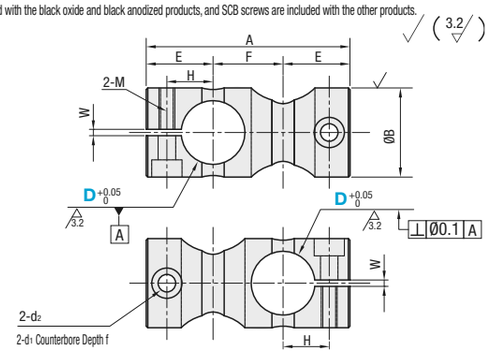

Part Number Type	D	A	B	E	F	H	W	M (Coarse)	Counterbore d1	d2	f
Equal Dia., Perpendicular Configuration C-KDST C-MDKT C-ALKD C-HLKD	6	33	12	12.5	8	7.5	1	M3	6.5	3.4	3.3
	8	40	14	15	10	9	1	M4	8	4.5	4.4
	10	44	16	16	12	10	2	M4	8	4.5	4.4
	12	47	18	16.5	14	10.5	2	M4	8	4.5	4.4
	15	55	22	19	17	12.5	2	M5	9.5	5.5	5.4
	20	64	28	21	22	14.5	2	M5	9.5	5.5	5.4
	25	77	32	25	27	17.5	2	M6	11	6.6	6.5
	30	87	38	27.5	32	20	2	M6	11	6.6	6.5

There is no D dimension 6 for C-KDST and C-MDKT.
There is no D dimension 30 for C-ALKD and C-HLKD.
The tolerance and perpendicularity of $D^{+0.05}_{0}$ are before slitting.
For mating, g6, f8 shaft tolerances are recommended.
For overview of round strut clamp, refer to P.2162

Ordering Example

Part Number
C-KDST20

Example

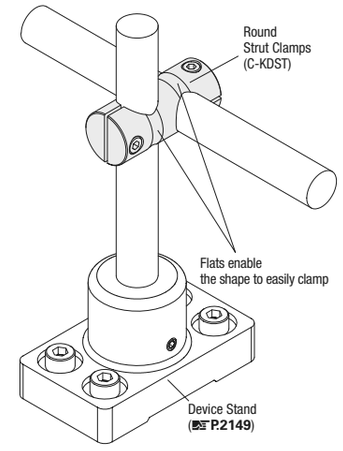

D	Unit Price C-KDST	C-MDKT	C-ALKD	C-HLKD
6	-	-		
8				
10				
12				
15				
20				
25				
30			-	-

Included Screw

D	Included Screw	
6	M3- 8	2 pcs.
8	M4- 8	
10	M4-10	
12	M4-12	
15	M5-15	
20	M5-20	
25	M6-22	
30	M6-30	

Strut Clamps

Equal Dia., Perpendicular Configuration / Reversed

Features: Most commont type of perpendicular configuration with equal diameter

Equal Dia., Perpendicular Configuration
Equal Dia., Perpendicular Configuration, Reversed

Type: Equal Dia., Perpendicular Configuration	Type: Equal Dia., Perpendicular Configuration, Reversed	Material	Surface Treatment	Accessory
KDST	KDSTK	EN 1.0038 Equiv.	Black Oxide	Hex Socket Head Cap Screw
MDKT	MDKTK		Electroless Nickel Plating	Hex Socket Head Cap Screw (Stainless Steel)
ALKD	ALKDK	Aluminum Alloy	Black Anodize	Hex Socket Head Cap Screw
HLKD	HLKDK		Clear Anodize	Hex Socket Head Cap Screw (Stainless Steel)
SLKD	SLKDK	EN 1.4301 Equiv.	-	

CB screws are included with the black oxide and black anodized products, and SCB screws are included with the other products.

Equal Dia., Perpendicular Configuration D=6~12

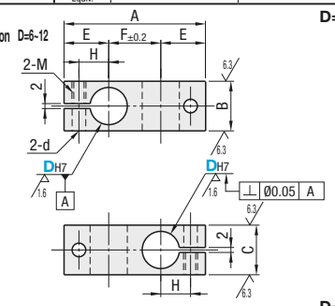

D=15~35

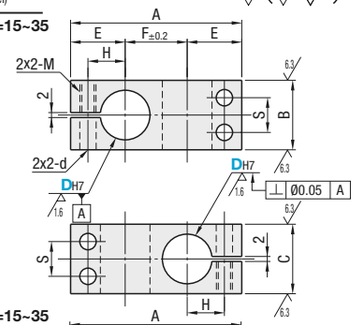

Equal Dia., Perpendicular Configuration Reversed D=6~12

*The fastening screws are inserted in the opposite direction of the above Equal Dia., Perpendicular Configuration.

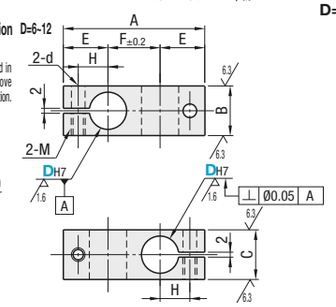

D=15~35

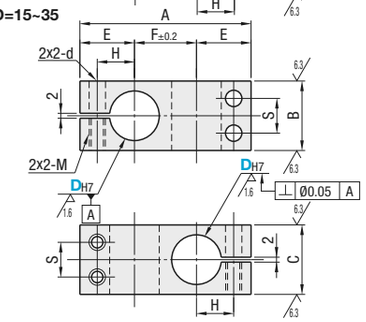

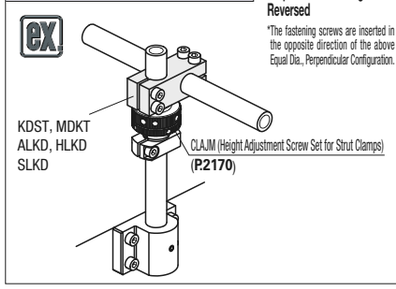

Part Number Type		DH7		A	B	C	E	F	H	S	M (Coarse)	d
Equal Dia., Perpendicular Configuration	Equal Dia., Perpendicular Configuration, Reversed	6	+0.012 0	34	10	10	12	10	7	-	M4	4.5
		8	+0.015 0	41	12	12	14	13	8	-	M5	5.5
		10		45	16	16	15	15	9	-		
KDST	KDSTK	12	+0.018 0	49			16	17	10	-		
MDKT	MDKTK	15		57	22	22	18	21	12	11		
ALKD	ALKDK	16										
HLKD	HLKDK	20	+0.021 0	69	28	28	22	25	15	14	M6	6.6
SLKD	SLKDK	25		83	32	32	25	33	18	16		
		30		95	40	40	29	37	21	20	M8	9
		35	+0.025 0	107	45	45	32	43	24	24		

D Dimension for SLKD and SLKDK is available up to 30.
The tolerance and perpendicularity of DH7 are before slitting.
For mating, g6, f8 shaft tolerances are recommended. Tightening with a long wrench is recommended.
D Dimension 6 is not available for ALKD, ALKDK, HLKD, HLKDK, SLKD and SLKDK.
D Dimension 16 is not available for HLKD and Reversed Type.

Ordering Example

Part Number
KDST20

D	Unit Price: Equal Dia., Perpendicular Configuration KDST	ALKD	MDKT	HLKD	SLKD	Equal Dia., Perpendicular Configuration, Reversed KDSTK	ALKDK	MDKTK	HLKDK	SLKDK
6		-		-	-		-		-	-
8										
10										
12										
15										
16				-		-	-	-	-	-
20										
25										
30										
35					-					-

Included Screw

D	Included Screw
6	M4-10, 2 pcs.
8	M5-12, 2 pcs.
10	M5-15, 2 pcs.
12	M5-15, 2 pcs.
15	M5-20, 4 pcs.
16	M5-20, 4 pcs.
20	M6-25, 4 pcs.
25	M6-30, 4 pcs.
30	M8-35, 4 pcs.
35	M8-40, 4 pcs.

Super Compact Strut Clamps / Resin Compact Strut Clamps

Equal / Unequal Dia., Perpendicular Configuration　Equal Dia., Perpendicular Configuration

Features: Affordable and compact Strut Clamps.

Super Compact Strut Clamps Equal / Unequal Dia., Perpendicular Configuration

Type: Equal Dia.	Type: Unequal Dia.	M Material	S Surface Treatment	A Accessory
ALKC	ALNC	Aluminum Alloy 6000 series	Black Anodize	Hex Socket Head Cap Screw
ALKW	ALNW		Clear Anodize	

Equal Dia., Perpendicular Configuration (ALKC, ALKW)

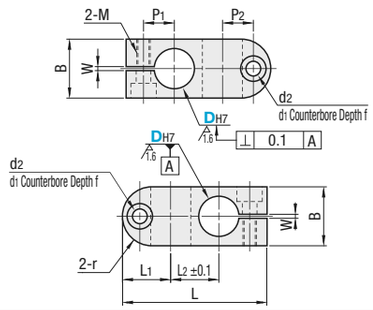

Unequal Dia., Perpendicular Configuration (ALNC, ALNW)

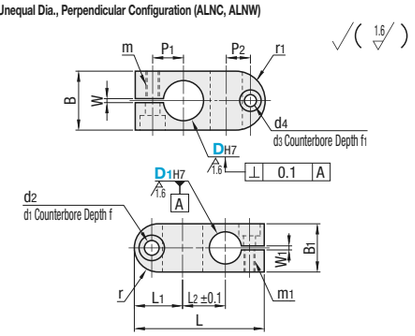

RoHS

Equal Dia., Perpendicular Configuration

Part Number Type	DH7		B	L	L1	L2	r	P1	P2	m	Counterbored Hole d1	d2	f	W	Unit Price ALKC, ALKW
ALKC ALKW	6	+0.012 0	10	29	10.5	8	5	6.5	6.5	M3	6.5	3.5	3.5	1	
	8	+0.015 0	12	32	11	10	6	7	7						
	10		16	39	13.5	12	8	8.5	8.5	M4	8	4.5	4.5	1.5	
	12	+0.018 0	18	43	14	15	9	9	9						
	15		22	54	18	18	11	11.5	11.5	M5	9.5	5.5	5.5		

Unequal Dia., Perpendicular Configuration

Part Number Type	DH7		D1H7		B	B1	L	L1	L2	r	r1	P1	P2	m	Counterbored Hole d1	d2	f	W	m1	Counterbored Hole d3	d4	f1	W1	Unit Price ALNC, ALNW
ALNC ALNW	8	+0.015 0	6	+0.012 0	12	10	31.5	11	10	5	6	7	6.5	M3	6.5	3.5	3.5	1	M3	6.5	3.5	3.5	1	
	10	+0.015 0	6	+0.012 0	16	12	37.0	13.5	12	6	8	8.5	7	M4	8	4.5	4.5	1.5	M4	8	4.5	4.5	1	
	10		8	+0.015 0			36.5		12					M3	6.5	3.5	3.5							
	12	+0.018 0	8	+0.015 0	18	14	40.0	14	14	7	9	9	7.5	M4	8	4.5	4.5	1.5	M4	8	4.5	4.5	1	
	12		10				39.5							M3	6.5	3.5	3.5		M3	6.5	3.5	3.5	1.5	
	15	+0.018 0	10	+0.015 0	22	18	49.0	18	16	9	11	11.5	9	M5	9.5	5.5	5.5	1.5	M5	9.5	5.5	5.5	1.5	
	15		12	+0.018 0			48.5												M4	8	4.5	4.5		

The tolerance and perpendicularity of DH7 and D1H7 are the tolerances before slitting.
For mating, g6, f8 shaft tolerances are recommended. Tightening with a long wrench is recommended.

Ordering Example: Part Number - D1
ALKC8
ALNC10 - 8

Included Screw: Equal Dia., Perpendicular Configuration

D	Included Screw	
6	M3-6	2 pcs.
8	M3-8	
10	M4-10	
12	M4-12	
15	M5-15	

Included Screw: Unequal Dia., Perpendicular Configuration

D	D1	Included Screw	
8	6	M3-6, M3-8	1 pc. each
10	8	M4-6, M4-10	
10	8	M3-8, M4-10	
12	10	M4-8, M4-12	
12	10	M3-10, M4-12	
15	10	M5-12, M5-15	
15	12	M4-12, M5-15	

Features: Affordable Strut Clamps when purchased 10 pcs. or more. Suitable for applications where many are needed, such as for Conveyers, etc. For clamps in stand sets for mounting sensors, refer to P.2057, 2058

Resin Compact Strut Clamps Equal Dia., Perpendicular Configuration

RoHS

SENJK

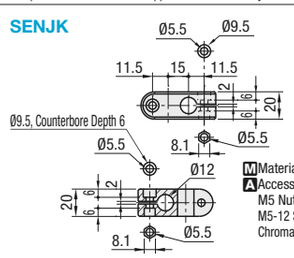

M Material: Polyamide
A Accessory: M5 Nut 2pcs., M5-12 Screw (Trivalent Chromate) 2pcs.

Resin clamps are not suitable for supporting heavy objects.

Part Number	Unit Price 1 ~ 9 pc(s).	Volume Discount Rate 10 ~ 50 pcs.
SENJK		

For orders larger than indicated quantity, please check with WOS.

Ordering Example: Part Number
SENJK

ex Example: Conveyor Guide Mounting

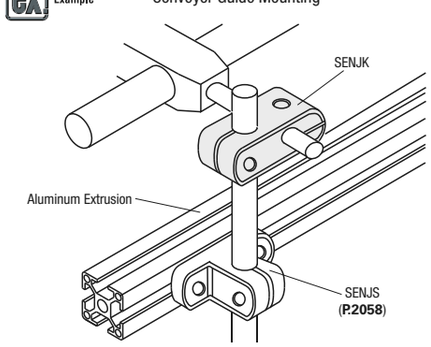

Super Compact Strut Clamps / Strut Clamps

Equal / Unequal Dia., Perpendicular Configuration with Wing Knobs　Equal Dia., Perpendicular Configuration with Clamp Levers

Features: Affordable and compact Strut Clamps. Easy setup changes with wing knobs.

Equal / Unequal Dia., Perpendicular Configuration with Wing Knobs

RoHS

Type: Equal Dia.	Type: Unequal Dia.	M Material	S Surface Treatment	A Accessory
ALKCC	ALNCC	EN AW-6061 Equiv.	Black Anodize	Wing Knob (Black)
ALKWC	ALNWC		Clear Anodize	Wing Knob (White)

* Head of Wing Knob: Nylon 66
Thread Section: SWRM-10
Trivalent Chromate

· Equal Dia. Perpendicular Configuration (ALKCC, ALKWC)

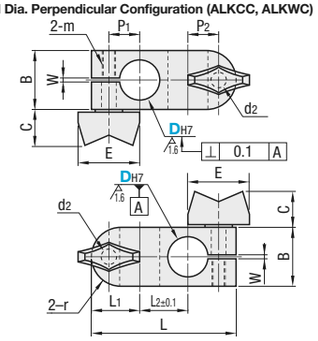

· Unequal Dia., Perpendicular Configuration (ALNCC, ALNWC)

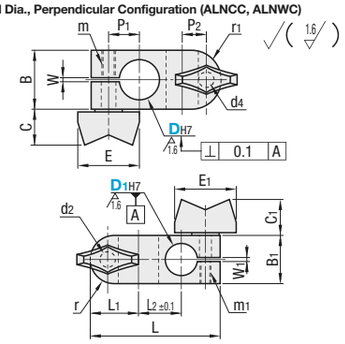

Equal Dia., Perpendicular Configuration with Wing Knobs

Part Number Type	DH7		B	L	L1	L2	r	P1	P2	d2	m	W	Wing Knob E	C	Unit Price ALKCC, ALKWC
ALKCC ALKWC	6	+0.012 0	10	29	10.5	8	5	6.5	6.5	3.5	M3	1	18	10.5	
	8	+0.015 0	12	32	11	10	6	7	7						
	10		16	39	13.5	12	8	8.5	8.5	4.5	M4	1.5			
	12	+0.018 0	18	43	14	15	9	9	9						
	15		22	54	18	18	11	11.5	11.5	5.5	M5		28	15	

Unequal Dia., Perpendicular Configuration with Wing Knobs

Part Number Type	DH7		D1H7		B	B1	L	L1	L2	r	r1	P1	P2	d4	m	W	Wing Knob E	C	m1	W1	Wing Knob E1	C1	Unit Price ALNCC, ALNWC
ALNCC ALNWC	8	+0.015 0	6	+0.012 0	12	10	31.5	11	10	5	6	7	6.5	3.5	M3	1	18	10.5	M3	1	18	10.5	
	10	+0.015 0	6	+0.012 0	16	12	37	13.5	12	6	8	8.5	7	4.5	M4	1.5	18	10.5	M4	1	18	10.5	
	10		8	+0.015 0			36.5		12					3.5					M3				
	12	+0.018 0	8	+0.015 0	18	14	40	14	14	7	9	9	7.5	4.5	M4	1.5	18	10.5	M4	1	18	10.5	
	12		10				39.5							3.5					M3	1.5			
	15	+0.018 0	10	+0.015 0	22	18	49	18	16	9	11	11.5	9	5.5	M5	1.5	28	15	M5	1.5	28	15	
	15		12	+0.018 0			48.5							4.5					M4		18	10.5	

The tolerance and perpendicularity of DH7 and D1H7 are the tolerances before slitting.
For mating, g6, f8 shaft tolerances are recommended. Do not tighten the wing nut unless the shaft is set in D part.

Ordering Example: Part Number - D1
ALKCC8
ALNCC10 - 8

Features: Easy setup changes, suitable for frequent changes.

Equal Dia., Perpendicular Configuration with Clamp Levers

RoHS

Type	M Material	S Surface Treatment	A Accessory
KKST	EN 1.0038 Equiv.	Black Oxide	Clamp Lever
MKST		Electroless Nickel Plating	
AKST	EN AW-6063 Equiv.	Black Anodize	
SKSTS	EN 1.4301 Equiv.	-	

ex

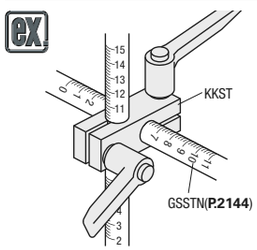

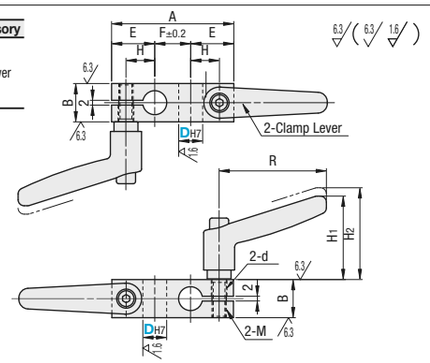

Part Number Type	DH7		A	B	E	F	H	M	d	R	H1	H2	Clamp Lever	Unit Price KKST	MKST	AKST	SKSTS
KKST MKST AKST (D≤30) SKSTS (D≤30)	10	+0.015 0	51	16	18	15	12	M6	6.6	45	35	38.5	CLDM 6-16-M				
	12	+0.018 0	54	19		18							CLDM 6-20-M				
	15		69	22	24	21	16	M8	9	63	45.5	49	CLDM 8-20-M				
	20		78	28	26	26	19						CLDM 8-25-M				
	25	+0.021 0	97	36	32	33	23	M10	11	78	55	59	CLDM 10-32-M				
	30		105	40	34	37	25						CLDM 10-40-M				
	35	+0.025 0	121	45	39	43	29	M12	13	92	67	71	CLDM 12-40-M			-	-

Available D Dimension for AKST and SKSTS is up to 30. The tolerance and perpendicularity of DH7 are before slitting. For mating, g6, f8 shaft tolerances are recommended.

Ordering Example: Part Number
KKST20
SKSTS15

Compact Strut Clamps

Equal / Unequal Dia., Perpendicular Configuration

Features: Compact strut clamp with profile machined on the edge.

Equal Dia., Perpendicular Configuration

Type	Material	Surface Treatment	Accessory
KDSTR	EN 1.0038 Equiv.	Black Oxide	Hex Socket Head Cap Screw
MDKTR		Electroless Nickel Plating	Hex Socket Head Cap Screw (Stainless Steel)
ALKDR	EN AW-6063 Equiv.	Black Anodize	Hex Socket Head Cap Screw
SLKDR	EN 1.4301 Equiv.	-	Hex Socket Head Cap Screw (Stainless Steel)

D	A	F
8	39	11
10	43	13
12	47	15
15	55	19
20	69	23
25	83	31
30	95	35

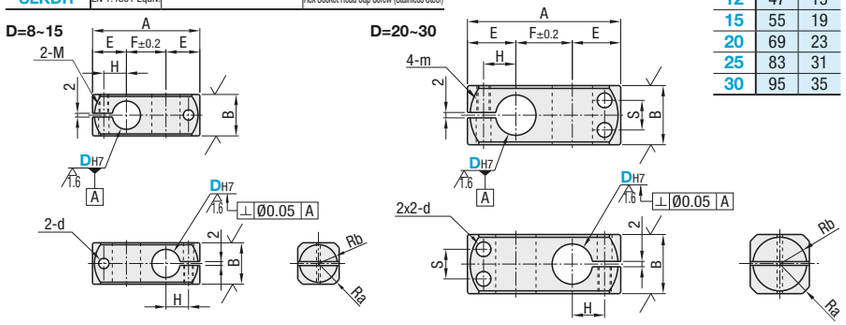

Unequal Dia., Perpendicular Configuration

Type	Material	Surface Treatment	Accessory
KLSTNR	EN 1.0038 Equiv.	Black Oxide	Hex Socket Head Cap Screw
MLSTNR		Electroless Nickel Plating	Hex Socket Head Cap Screw (Stainless Steel)
ALKLNR	Aluminum Alloy 6000 series	Black Anodize	Hex Socket Head Cap Screw
SLKLNR	EN 1.4301 Equiv.	-	Hex Socket Head Cap Screw (Stainless Steel)

D	A	F
8	39	12
10	43	14
12	47	16
15	51	18
20	66	23
25	74	28
30	87	32
35	100	39

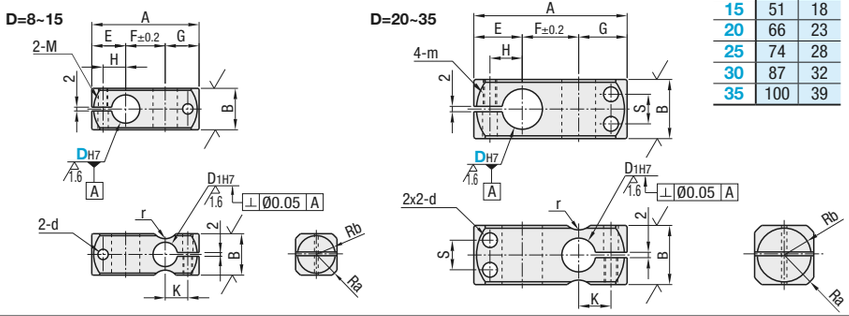

Part Number Type		DH7		D1H7		B	E	G	H	K	Ra	Rb	r	S	d	M (Coarse)
Equal Dia., Perpendicular Configuration	Unequal Dia., Perpendicular Configuration	8	+0.015 0	6	+0.012 0	12	14	13	8	7	7.6	5	3	-	5.5	M5
KDSTR	KLSTNR	10		8	+0.015 0	16	15	14	9	8	9.8	7	4			
MDKTR	MLSTNR	12	+0.018 0	10			16	15	10	9	10.4		-			
ALKDR	ALKLNR	15				22	18		12		13.8	10	5			
SLKDR	SLKLNR	20	+0.021 0	15	+0.018 0	28	23	20	15	12	17.7	13	7.5	11	6.6	M6
		25				32	26		18		20.9	15		14		
		30		20	+0.021 0	40	30	25	21	16	25.6	19	10	16	9	M8
		35	+0.025 0	25		45	33	28	24	19	29.1	21.5	12.5	18		

D dimension 35 is only applicable to MLSTNR and SLKLNR.
The tolerance and perpendicularity of DH7 and D1H7 are the tolerances before slitting.
For mating, g6, f8 shaft tolerances are recommended. Tightening with a long wrench is recommended.

Ordering Example

Part Number
KDSTR20
KLSTNR20

Equal Dia., Perpendicular Configuration

D	Unit Price			
	KDSTR	MDKTR	ALKDR	SLKDR
8				
10				
12				
15				
20				
25				
30				

Unequal Dia., Perpendicular Configuration

D	Unit Price			
	KLSTNR	MLSTNR	ALKLNR	SLKLNR
8				
10				
12				
15				
20				
25				
30				
35	-		-	

Included Screw

D	Included Screw	
	Equal Dia., Perpendicular Configuration	Unequal Dia., Perpendicular Configuration
8	M5-12, 2 pcs.	M5-12, 4 pcs.
10	M5-15, 2 pcs.	M5-15, 4 pcs.
12	M5-15, 2 pcs.	M5-15, 4 pcs.
15	M6-20, 2 pcs.	M6-20, 4 pcs.
20	M6-25, 2 pcs.	M6-25, 4 pcs.
25	M6-30, 2 pcs.	M6-30, 4 pcs.
30	M8-35, 2 pcs.	M8-35, 4 pcs.
35	-	M8-40, 4 pcs.

Strut Clamps

Unequal Dia., Perpendicular Configuration / Reversed

Features: Type of perpendicular configuration with different diameter.

Unequal Dia., Perpendicular Configuration
Unequal Dia., Perpendicular Configuration, Reversed

Type: Unequal Dia., Perpendicular Configuration	Type: Unequal Dia., Perpendicular Configuration, Reversed	Material	Surface Treatment	Accessory
KLSTN	KLSTK	EN 1.0038 Equiv.	Black Oxide	Hex Socket Head Cap Screw
MLSTN	MLSTK		Electroless Nickel Plating	Hex Socket Head Cap Screw (Stainless Steel)
ALKLN	ALKLK	EN AW-6063 Equiv.	Black Anodize	Hex Socket Head Cap Screw
HLKLN	-		Clear Anodize	Hex Socket Head Cap Screw (Stainless Steel)
SLKLN	SLKLK	EN 1.4301 Equiv.	-	

CB screws are included with the black oxide and black anodized products, and SCB screws are included with the other products.

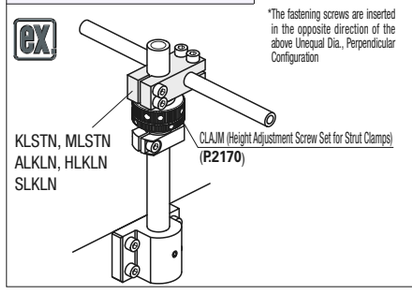

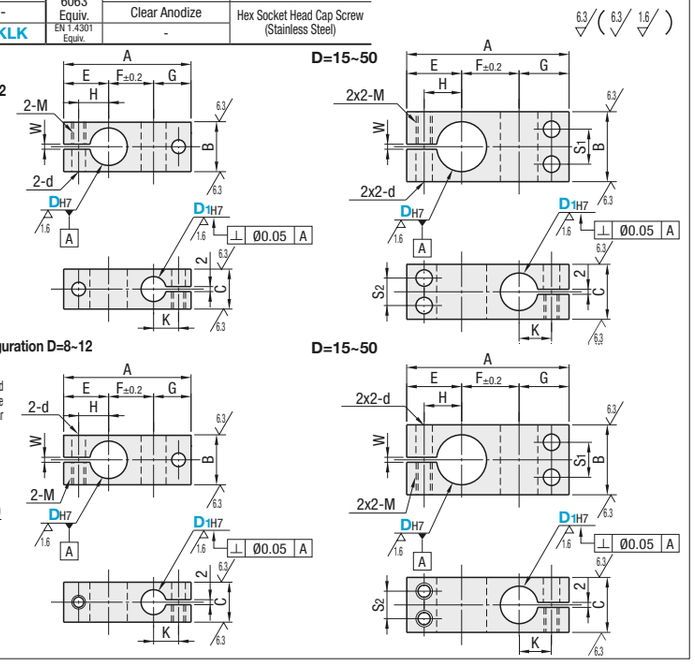

Part Number Type		DH7		D1H7		A	B	C	E	F	G	H	K	S1	S2	M (Coarse)	d	W
Unequal Dia., Perpendicular Configuration	Unequal Dia., Perpendicular Configuration, Reversed	8	+0.015 0	6	+0.012 0	37	12	9	13	12	12	8	7	-	-	M4	4.5	2
KLSTN	KLSTK	10		8	+0.015 0	43	16	12	15	14	14	9	8	-	-	M5	5.5	
MLSTN	MLSTK	12	+0.018 0	10		47		16	16	16	15	10	9	-	-			
ALKLN	ALKLK	15				51	22	18	18	18		12		11	9			
HLKLN	SLKLK	20	+0.021 0	15	+0.018 0	65	28	22	22	23	20	15	13	14	11	M6	6.6	
SLKLN		25		16		73	32	25	25	28		18	13	16	14			
		30		15		85	40	30	29	32	24	21	16	20	15	M8	9	
		35	+0.025 0	20	+0.021 0	98	45	35	32	39	27	24	19	24	20			
KLSTN	KLSTK	40	+0.025 0	25		106	50	40	34	43	29	26	21	25	20	M8	9	3
		50		30	+0.021 0	130	65	50	43	52	35	33	25	32	28	M10	11	
				35	+0.025 0													

D Dimension for SLKLN and SLKLK is available up to 30.
The tolerance and perpendicularity of DH7 and D1H7 are the tolerances before slitting.
For mating, g6, f8 shaft tolerances are recommended. Tightening with a long wrench is recommended.
D Dimension 8 is not available for ALKLN, ALKLK, HLKLN, SLKLN, or SLKLK.
D1 Dimension 16 is not available for HLKLN and Reversed Type.

Ordering Example

Part Number	-	D1
KLSTN20	-	15

Unequal Dia., Perpendicular Configuration / Unequal Dia., Perpendicular Configuration, Reversed

D	Unit Price								
	Unequal Dia., Perpendicular Configuration					Unequal Dia., Perpendicular Configuration, Reversed			
	KLSTN	ALKLN	MLSTN	HLKLN	SLKLN	KLSTK	ALKLK	MLSTK	SLKLK
8		-		-	-		-		-
10									
12									
15									
20									
25									
30									
35					-				-
40		-	-	-	-		-	-	-
50		-	-	-	-		-	-	-

Included Screw

D	Included Screw
8	M4-8/M4-12, 1 pc. each
10	M5-12/M5-10, 1 pc. each
12	M5-15, 2 pcs.
15	M5-20/M5-15, 2 pcs. each
20	M6-25/M6-20, 2 pcs. each
25	M6-30/M6-25, 2 pcs. each
30	M8-35/M8-30, 2 pcs. each
35	M8-40/M8-35 , 2 pcs. each
40	M8-45/M8-40, 2 pcs. each
50	M10-55/M10-45, 2 pcs. each

Strut Clamps

Equal / Unequal Dia., Perpendicular Configuration, Hole Pitch Selectable

Features: Selectable shaft pitch between two Posts for Stands.

Equal Dia., Perpendicular Configuration, Hole Pitch Selectable

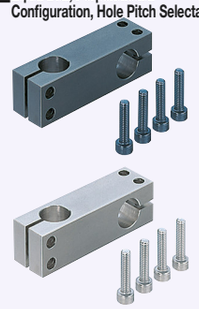

Unequal Dia., Perpendicular Configuration, Hole Pitch Selectable

RoHS

Type: Equal Dia., Perpendicular Configuration	Type: Unequal Dia., Perpendicular Configuration	M Material	S Surface Treatment	A Accessory
KMKC	KMKD	EN 1.0038 Equiv.	Black Oxide	Hex Socket Head Cap Screw
MMKC	MMKD		Electroless Nickel Plating	Hex Socket Head Cap Screw (Stainless Steel)
AMKC	AMKD	Aluminum Alloy 6000 series	Black Anodize	Hex Socket Head Cap Screw
SMKC	SMKD	EN 1.4301 Equiv.	-	Hex Socket Head Cap Screw (Stainless Steel)

CB screws are included with the black oxide and black anodized products, and SCB screws are included with the other products.

Equal Dia. Perpendicular Configuration D=6~12

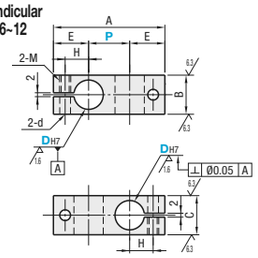

D=15~35

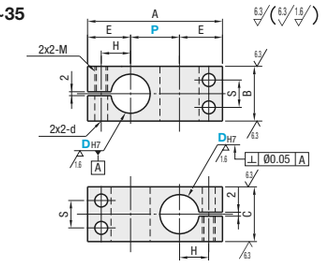

• P Dimension Tolerance: JIS B 0405 Medium Class (**P.2286**)

Unequal Dia., Perpendicular Configuration D=8~12

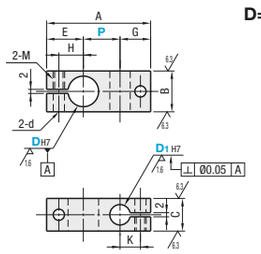

D=15~35

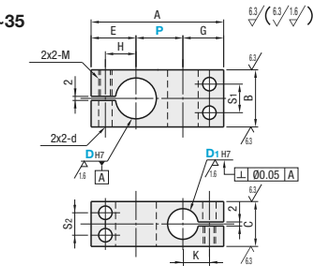

• P Dimension Tolerance: JIS B 0405 Medium Class (**P.2286**)

Equal Dia., Perpendicular Configuration, Hole Pitch Selectable

Part Number Type	DH7		P Selection	A	B	C	E	H	S	M	d
KMKC MMKC AMKC SMKC	6	+0.012 0	10 15 20	A=P+(2xE)	10	10	12	7	-	M4	4.5
	8	+0.015 0	10 15 20 25		12	12	14	8	-	M5	5.5
	10	+0.018 0	15 20 25 30		16	16	15	9	-		
	12						16	10	-		
	15		20 25 30 40		22	22	18	12	11		
	20	+0.021 0	25 30 40 50		28	28	22	15	14	M6	6.6
	25		30 40 50 75		32	32	25	18	16		
	30		50 75 100 150		40	40	29	21	20	M8	9
	35	+0.025 0			45	45	32	24	24		

For the available sizes, refer to the price list. The tolerance and perpendicularity of DH7 are before slitting.
For mating, g6, f8 shaft tolerances are recommended. Tightening with a long wrench is recommended.

Unequal Dia., Perpendicular Configuration, Hole Pitch Selectable

Part Number Type	DH7		D1H7		P Selection	A	B	C	E	G	H	K	S1	S2	M	d
KMKD MMKD AMKD SMKD	8	+0.015 0	6	+0.012 0	10 15 20	A=P+E+G	12	9	13	12	8	7	-	-	M4	4.5
	10		8	+0.015 0	15 20 25		16	12	15	14	9	8	-	-	M5	5.5
	12	+0.018 0	10		15 20 25 30		16	16	16	15	10	9	-	-		
	15						22	18	18	15	12	10	11	9		
	20	+0.021 0	15	+0.018 0	20 25 30 40		28	22	22	20	15	13	14	11	M6	6.6
	25				25 30 40 50		32	25	25	20	18	13	16	14		
	30		20	+0.021 0	30 40 50 75		40	30	29	24	21	16	20	15	M8	9
	35	+0.025 0	25		50 75 100 150		45	35	32	27	24	19	24	20		

D Dimension for SMKD is available up to 30. D Dimension 8 is not available for AMKD and SMKD. The tolerance and perpendicularity of DH7 and D1H7 are the tolerances before slitting.
For mating, g6, f8 shaft tolerances are recommended. Tightening with a long wrench is recommended.

Ordering Example

Part Number	-	D1	-	P
KMKC10			-	20
MMKD20	-	15	-	30

D	Unit Price: Equal Dia., Perpendicular Configuration KMKC	MMKC	AMKC	SMKC	Unequal Dia., Perpendicular Configuration KMKD	MMKD	AMKD	SMKD
6			-	-	-	-	-	-
8							-	-
10								
12								
15								
20								
25								
30				-				
35			-	-				-

Included Screw

D	Included Screw: Equal Dia., Perpendicular Configuration	Unequal Dia., Perpendicular Configuration
6	M4-10, 2 pcs.	-
8	M5-12, 2 pcs.	M4-8/M4-12, 1 pc. each
10	M5-15, 2 pcs.	M5-12/M5-10, 1 pc. each
12	M5-15, 2 pcs.	M5-20, 2 pcs.
15	M5-20, 4 pcs.	M5-20/M5-15, 2 pcs. each
20	M6-25, 4 pcs.	M6-25/M6-20, 2 pcs. each
25	M6-30, 4 pcs.	M6-30/M6-25, 2 pcs. each
30	M8-35, 4 pcs.	M8-35/M8-30, 2 pcs. each
35	M8-40, 4 pcs.	M8-40/M8-35, 2 pcs. each

Height Adjustment Screw Set for Strut Clamps

Features: By mounting below the clamp, fine manual adjustments are possible (Max. stroke 5mm recommended). Best suited for adjustments of cameras and sensors.

With Double Nuts

Without Double Nuts

RoHS

Type: With Double Nuts	Type: Without Double Nuts	M Material: Main Body	M Material: Nut	S Surface Treatment	A Accessory
CLAWM	CLAJM	EN 1.1191 Equiv.	EN 1.0736 Equiv.	Electroless Nickel Plating	Hex Socket Head Cap Screw (Stainless Steel)
CLAWB	CLAJB			Black Oxide	Hex Socket Head Cap Screw

CB screws and SCB screws are included with the black oxide products and electroless nickel plating products, respectively.

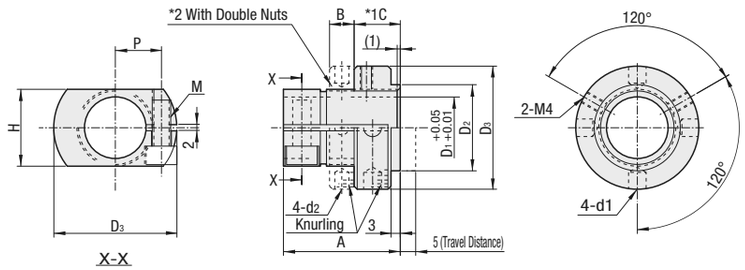

*1. The drawing shows the nut protruding 1mm from the sleeve (Part A).
*2. When the type without the Double Nuts is selected, double nuts will not be included. Only Part A and B are included.
See the instruction below for Parts A, B, and C.

Part Number Type: With Double Nuts	Type: Without Double Nuts	D1		A	B	C	H	P	D2	D3	M	d1	d2	Travel Distance	Included Screw	Unit Price: With Double Nuts CLAWM	CLAWB	Without Double Nuts CLAJM	CLAJB
CLAWM CLAWB	CLAJM CLAJB	10	+0.05 +0.01	30	6	11	14	9.5	16	28	4	4.6	3.4	5	M4-8, 1pc.				
		12		31		12	16	10	18	30					M4-10, 1pc.				
		15		33		13	20	12	22	35	5				M5-12, 1pc.				
		20		38	8	15	25	15	28	40	6	5.7	4.6		M6-15, 1pc.				
		25		40		17	30	17	34	45					M6-18, 1pc				
		30		46		19	36	21	40	55	8	6.8	5.7		M8-20, 1pc.				

D1 tolerance is before the slit machining. Set screw is not included.
Recommended tolerances of mating shafts for D1: g6, f8.

Ordering Example

Part Number
CLAJM20

How to Use (Adjustable range is 5mm)

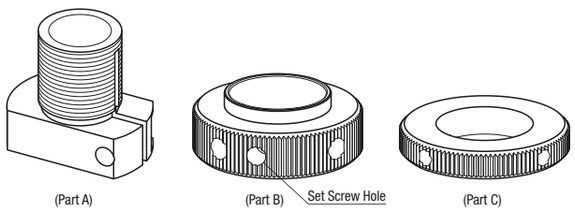

① Mount Part A below a strut clamp to be adjustable.
② Install Part B on the threaded part of Part A.
③ After mounting the strut clamp, position Part B with a hand or HEX wrench, adjust the strut clamp to a desired position by utilizing the thread pitch. (Stroke 5mm)
④ Secure the strut clamp by tightening the screw.
(The Set Screw can be used to temporarily fix the position before the final step ④.)

<Double Nut Type>
Mount Part C on thread part of Part A after the step ①.
Using the Part C, Double Nut mounting is facilitated.
Can be used as a stopper when the strut clamp is loosened.

Example

"Need a little more fine-adjustment in height"
"Need a more economical mechanism for clamp adjustment"
Ideal for these needs.

·Suitable for 1-2mm adjustments of cameras, etc.

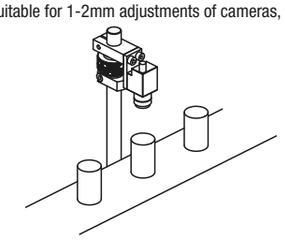

·A wrench can be used for heavier objects.

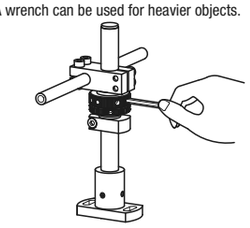

Strut Clamps

Equal Dia. / Unequal Dia. / Equal Dia. T, Perpendicular Split

Features: Post-assembly mounting onto Posts for Stands in structures.

Equal Dia., Perpendicular Configuration, Split

Unequal Dia., Perpendicular Configuration, Split

RoHS

Type: Equal Dia., Perpendicular Configuration	Type: Unequal Dia., Perpendicular Configuration	M Material	S Surface Treatment	A Accessory
KSBC	KSLC	EN 1.0038 Equiv.	Black Oxide	Hex Socket Head Cap Screw
MSBC	MSLC		Electroless Nickel Plating	Hex Socket Head Cap Screw (Stainless Steel)
ASBC	ASLC	EN AW-6063 Equiv.	Black Anodize	Hex Socket Head Cap Screw
SSBC	SSLC	EN 1.4301 Equiv.	-	Hex Socket Head Cap Screw (Stainless Steel)

CB screws are included with the black oxide and black anodized products, and SCB screws are included with the other products.

Equal Dia., Perpendicular Configuration

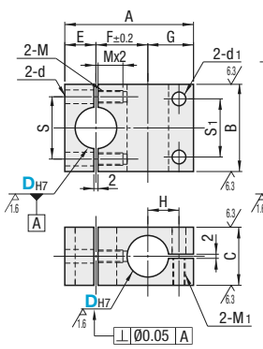

Unequal Dia., Perpendicular Configuration

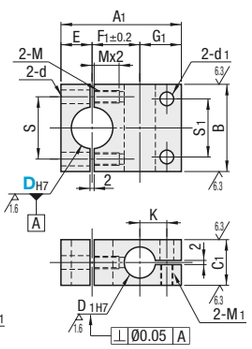

Part Number Type	D H7		A	A1	B	C	C1	D1H7		E	F	F1	G	G1	H	K	S	d	M (Coarse)	S1	d1	M1 (Coarse)
Equal Dia., Perpendicular Configuration KSBC MSBC ASBC SSBC	8	+0.015 0	34	-	25	12	-	-		8	13	-	13	-	8	-	16	4.5	M4	15	4.5	M4
	10		37	35		16	12	8	+0.015 0		15	14	14	13	9	8	17			16	5.5	M5
	12	+0.018 0	42	41	28		16	10		10	17	16	15	15	10	9	20			18		
	15		51	45	32	22	18			12	21	18	18		12		23	5.5	M5	22		
Unequal Dia., Perpendicular Configuration (D≥10) KSLC MSLC ASLC SSLC	20	+0.021 0	62	58	40	28	22	15	+0.018 0	15	25	23	22	20	15	13	29	6.6	M6	28	6.6	M6
	25		76	66	45	32	25			18	33	28	25		18		34			30		
	30		89	79	60	40	30	20	+0.021 0	23	37	32	29	24	21	16	44	9	M8	40	9	M8
	35	+0.025 0	101	92	65	45	35	25		26	43	39	32	27	24	19	50			45		

For the available sizes, refer to the price list. Unequal Dia., Perpendicular Configuration Type is available for the size larger than D10.
The tolerance and perpendicularity of DH7 and D1H7 are the tolerances before slitting.
Recommended tolerances of mating shafts for D1: g6, f8.

Ordering Example

Part Number
KSBC15
MSLC30

Alterations

Part Number	-	(ALW)
ASBC15	-	ALW

Alteration	Code	Spec.
Clear Anodize	ALW	Changes ASBC and ASLC from black anodize to clear anodize. Applicable to ASBC and ASLC. Stainless steel screws are included.

Example

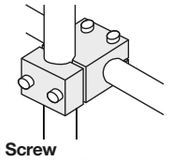

Included Screw

D	Included Screw
8	M4-15/M4-10, 2 pcs. each
10	M4-15/M5-15, 2 pcs. each
12	M4-18/M5-15, 2 pcs. each
15	M5-20/M5-20, 2 pcs. each
20	M6-25/M6-25, 2 pcs. each
25	M6-30/M6-25, 2 pcs. each
30	M8-35/M8-35, 2 pcs. each
35	M8-40/M8-40, 2 pcs. each

D1 side screws included with Unequal Dia., Perpendicular Configuration Type are shorter than listed above.

D	Unit Price: Equal Dia., Perpendicular Configuration KSBC	MSBC	ASBC	SSBC	Unequal Dia., Perpendicular Configuration KSLC	MSLC	ASLC	SSLC
8					-	-	-	-
10						-		
12								
15								
20								
25								
30								
35			-	-				

Equal Dia., Perpendicular Configuration, Split, T-Shaped

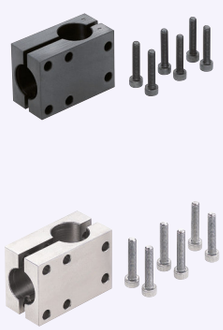

RoHS

Type	M Material	S Surface Treatment	A Accessory
KLTTS	EN 1.0038 Equiv.	Black Oxide	Hex Socket Head Cap Screw
MLTTS		Electroless Nickel Plating	
ALTTS	EN AW-6063 Equiv.	Black Anodize	
SLTTS	EN 1.4301 Equiv.	-	

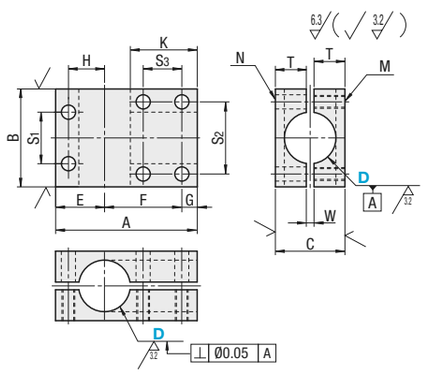

Part Number Type	D	A	B	C	E	F	G	H	K	M (Coarse)	N	S1	S2	S3	T	W	Unit Price KLTTS	MLTTS	ALTTS	SLTTS
KLTTS MLTTS ALTTS SLTTS	10	35	25	17	14	13	8	9	16	M5	5.5	15	16.5	-	8	1				
	12	40	32	19	15	16	9	10	19			16	20		9					
	15	50		22	16	28	6	11	26.5			18	22	15	10	2				
	20	55	38	27	19	30		14	26			20	28		12	3				
	25	65	44	35	22	37		17	30.5			22	34	18	16					-
	30	75	50	41	25	44		20	35			26	40	20	19				-	-

The perpendicularity is the tolerance before slitting. For the available sizes, refer to the price list.
For mating, g6, f8 shaft tolerances are recommended. Tightening with a long wrench is recommended.

Ordering Example

Part Number
KLTTS15

Example

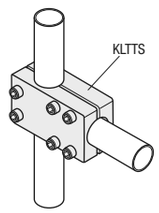

One Point

Temporary tighten the screws in order of ① to ⑥ before final tightening.
(If the shaft on one side is fully tightened first, tightening the other shaft may become difficult.)

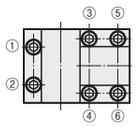

Included Screw

D	KLTTS ALTTS	MLTTS SLTTS
10	CB5-16, 4 pcs.	SCB5-16, 4 pcs.
12	CB5-18, 4 pcs.	SCB5-18, 4 pcs.
15	CB5-20, 6 pcs.	SCB5-20, 6 pcs.
20	CB5-25, 6 pcs.	SCB5-25, 6 pcs.
25	CB5-30, 6 pcs.	SCB5-30, 6 pcs.
30	CB5-35, 6 pcs.	SCB5-35, 6 pcs.

Strut Clamps

Equal/Unequal Dia., Parallel Holes, Pitch Selectable

Features: Two Posts for Stands fixable in parallel.

Equal Dia., Parallel Holes, Pitch Selectable

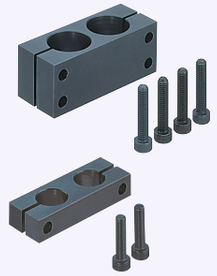

RoHS

Type: Standard	Type: Thin	M Material	S Surface Treatment	A Accessory
KKP	KKPT	EN 1.0038 Equiv.	Black Oxide	Hex Socket Head Cap Screw
MKP	-		Electroless Nickel Plating	Hex Socket Head Cap Screw (Stainless Steel)
AKP	-	EN AW-6063 Equiv.	Black Anodize	Hex Socket Head Cap Screw
SKP	-	EN 1.4301 Equiv.	-	Hex Socket Head Cap Screw (Stainless Steel)

D=8~12

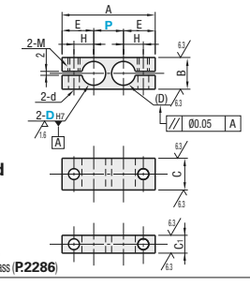

D=15~35

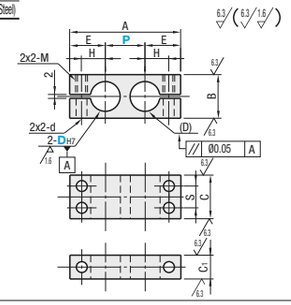

• P Dimension Tolerance: JIS B 0405 Medium Class (P.2286)

Part Number Type: Standard	Type: Thin	D H7		P Selection	A	B	C	C1	E	H	S	M	d
Standard KKP MKP AKP SKP	Thin KKPT	8	+0.015 0	10 15 20 25	A=P+(2xE)	12	12	-	14	8	-	M5	5.5
		10		15 20 25 30		16	16	9	15	9	-		
		12	+0.018 0						16	10	-		
		15		20 25 30 40		22	22	12	18	12	11		
		20	+0.021 0	25 30 40 50		28	28	16	22	15	14	M6	6.6
		25		30 40 50 75		32	32	19	25	18	16		
		30		50 75 100 150		40	40		29	21	20	M8	9
		35	+0.025 0			45	45	22	32	24	24		

For the available sizes, refer to the price list. The tolerance and parallelism of DH7 are the tolerances before slitting.
For mating, g6, f8 shaft tolerances are recommended. Tightening with a long wrench is recommended.

Unequal Dia., Parallel Holes, Pitch Selectable

RoHS

Type: Standard	Type: Thin	M Material	S Surface Treatment	A Accessory
KKQ	KKQT	EN 1.0038 Equiv.	Black Oxide	Hex Socket Head Cap Screw

D=10, 12

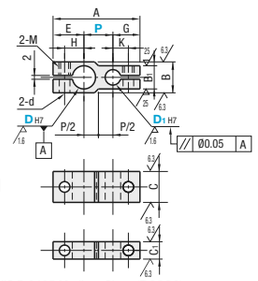

D=15~35

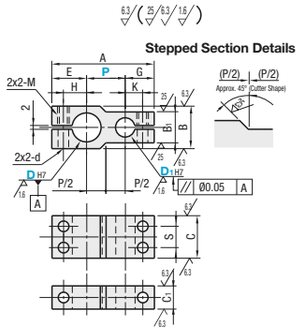

• P Dimension Tolerance: JIS B 0405 Medium Class (P.2286)

Part Number Type: Standard	Type: Thin	D H7		D1H7		P Selection	A	B	B1	C	C1	E	G	H	K	S	M	d
Standard KKQ	Thin KKQT	10	+0.015 0	8	+0.015 0	15 20 25	A=P+E+G	16	12	16	9	15	14	9	8	-	M5	5.5
		12	+0.018 0	10		15 20 25 30		16	14	16	9	16	15	10	9	-		
		15						22	16	22	12	18	15	12	9	11		
		20	+0.021 0	15	+0.018 0	20 25 30 40		28	22	28	16	22	19	15	12	14	M6	6.6
		25				25 30 40 50		32	22	32	19	25	19	18	12	16		
		30		20	+0.021 0	30 40 50 75		40	28	40	19	29	23	21	15	20	M8	9
		35	+0.025 0	25		50 75 100 150		45	32	45	22	32	25	24	18	24		

The tolerance and parallelism of DH7 and D1H7 are the tolerances before slitting. For the available sizes, refer to the price list.
For mating, g6, f8 shaft tolerances are recommended. Tightening with a long wrench is recommended.

Ordering Example

Part Number	-	D1	-	P
KKP10			-	20
KKQT20	-	15	-	30

D	Unit Price: Equal Dia., Parallel, Standard KKP	MKP	AKP	SKP	Thin KKPT	Unequal Dia., Parallel, Standard KKQ	Thin KKQT
8					-	-	-
10							
12							
15							
20							
25							
30							
35		-	-	-			

Included Screw

D	Included Screw (Thin Type has 1 screw on each side.): Equal Dia., Parallel	Unequal Dia., Parallel
8	M5-12, 2pcs.	-
10	M5-15, 2 pcs.	M5-12/M5-10, 1pc. each
12	M5-15, 2 pcs.	M5-15, 2 pcs.
15	M5-20, 4pcs.	M5-20/M5-15, 2pcs. each
20	M6-25, 4pcs.	M6-25/M6-20, 2pcs. each
25	M6-30, 4pcs.	M6-30/M6-20, 2pcs. each
30	M8-35, 4pcs.	M8-35/M8-30, 2pcs. each
35	M8-40, 4pcs.	M8-40/M8-35, 2pcs. each

Strut Clamps
Equal / Unequal Dia., Rotation

Features: Angle adjustments are possible between posts

Equal Dia., Rotation

Unequal Dia., Rotation

Type		M Material	S Surface Treatment	A Accessory
Equal Dia., Rotation	Unequal Dia., Rotation			
KLSR	KDSR	EN 1.0038 Equiv.	Black Oxide	Hex Socket Head Set Screw
MLKR	MDKR		Electroless Nickel Plating	
ALKR	ADKR	EN AW-6063 Equiv.	Black Anodize	
SLKR	SDKR	EN 1.4301 Equiv.	-	

Accessory: CB screws (P.2-171) and MSSK (P.2-210) are included with black oxide/black anodized products, and SCB screws (P.2-173) and MSSU (P.2-210) are included with the other products, respectively.

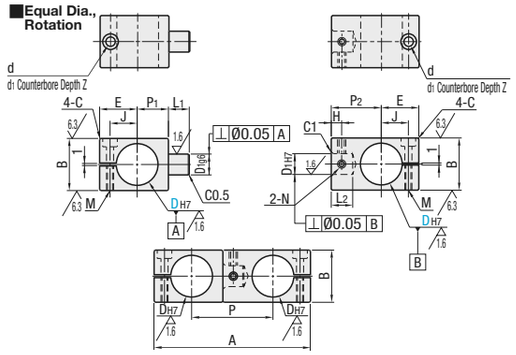

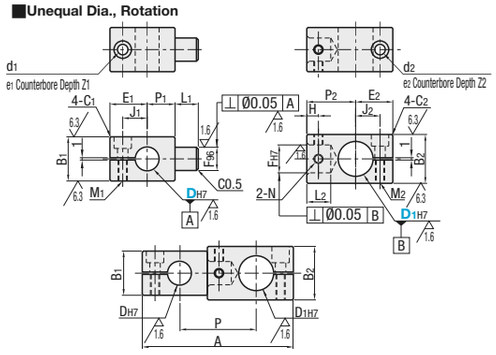

Equal Dia., Rotation

Part Number Type	DH7		D1	g6	H7	A	B	P	P1	P2	L1	L2	E	H	J	M	N	d	d1	Z	C
KLSR	8	+0.015 0	5	-0.004 -0.012	+0.012 0	42	12	19	7	12	6	6.3	11.5	3	7	M3	M3	3.5	6.0	3	2
MLKR	10					51	13	23	9	14			14.0		9	M4		4.5	7.5	5	
ALKR	12	+0.018 0				57	15	26	11	15			15.5		10						
SLKR	15		10	-0.005 -0.014	+0.015 0	65	19	33	12	21	10	10.3	16.0	5	10.5	M4	M4	4.5	7.5	5	3
	20	+0.021 0				76	25	39	15	24			18.5		13						
	25					88	30	44	18	26			22.0		16	M5	M5	5.5	9.0	5.5	4

The tolerance and perpendicularity of DH7 are before slitting.
For mating, g6, f8 shaft tolerances are recommended. Tightening with a long wrench is recommended.

Unequal Dia., Rotation

Part Number Type	DH7		D1H7		F	g6	H7	A	B1	B2	P	P1	P2	L1	L2	E1	E2	H	J1	J2	M1	M2	N	d1	d2	e1	e2	Z1	Z2	C1	C2
KDSR	8	+0.015 0	10	+0.015 0	5	-0.004 -0.012	+0.012 0	46.5	12	13	21	7	14	6	6.3	11.5	14	3	7	9	M3	M4	M3	3.5	4.5	6	7.5	3	5	2	2
MDKR	8		12	+0.018 0				49	12	15	22	7	15			11.5	15.5		7	10	M3	M4	M3	3.5	4.5	6	7.5	3	5	2	2
	10		12					53.5	13	15	24	9	15			14	15.5		9	10	M4	M4	M3	4.5	4.5	7.5	7.5	5	5	2	2
ADKR	15	+0.018 0	20	+0.021 0	10	-0.005 -0.014	+0.015 0	70.5	19	25	36	12	24	10	10.3	16	18.5	5	10.5	13	M4	M4	M4	4.5	4.5	7.5	7.5	5	5	3	3
SDKR	15		25					76	19	30	38	12	26			16	22		10.5	16	M4	M5	M5	4.5	5.5	7.5	9	5	5.5	3	4
	20	+0.021 0	25					81.5	25	30	41	15	26			18.5	22		13	16	M4	M5	M5	4.5	5.5	7.5	9	5	5.5	3	4

The tolerance and perpendicularity of DH7 and D1H7 are the tolerances before slitting. For the available sizes, refer to the price list.
For mating, g6, f8 shaft tolerances are recommended. Tightening with a long wrench is recommended.

Ordering Example: Part Number - D1
MLKR10
KDSR8 - 12

Equal Dia., Rotation

D	Unit Price			
	KLSR	MLKR	ALKR	SLKR
8				
10				
12				
15				
20				
25				

Unequal Dia., Rotation

D-D1	Unit Price			
	KDSR	MDKR	ADKR	SDKR
8-10				
8-12				
10-12				
15-20				
15-25				-
20-25				

Included Screw

D	Included Screw	
	Equal Dia., Rotation	Unequal Dia., Rotation
8	M3-8, 2 pcs.	M3-8/M4-8, 1 pc. each
10	M4-8, 2 pcs.	M3-8/M4-10, 1 pc. each
12	M4-10, 2 pcs.	M4-8/M4-10, 1 pc. each
15	M4-12, 2 pcs.	M4-12/M4-20, 1 pc. each
20	M4-20, 2 pcs.	M4-12/M5-20, 1 pc. each
25	M5-20, 2 pcs.	M4-20/M5-20, 1 pc. each

Strut Clamps
Square / Round Hole, Rotation

Features: Combined with Square Tubes and Stand-Up Brackets, Strut Clams can prevent rotation while adjusting height.

Square / Round Hole, Rotation

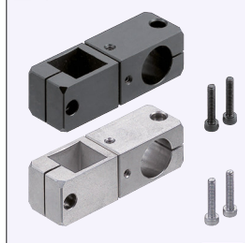

Type	M Material	S Surface Treatment	A Accessory
KHKR	EN 1.0038 Equiv.	Black Oxide	Hex Socket Head Set Screw
MHKR		Electroless Nickel Plating	
AHKR	EN AW-6063 Equiv.	Black Anodize	
SHKR	EN 1.4301 Equiv.	-	

Accessory: CB screws (P.2-171) and MSSK (P.2-210) are included with black oxide/black anodized products, and SCB screws (P.2-173) and MSSU (P.2-210) are included with the other products, respectively.

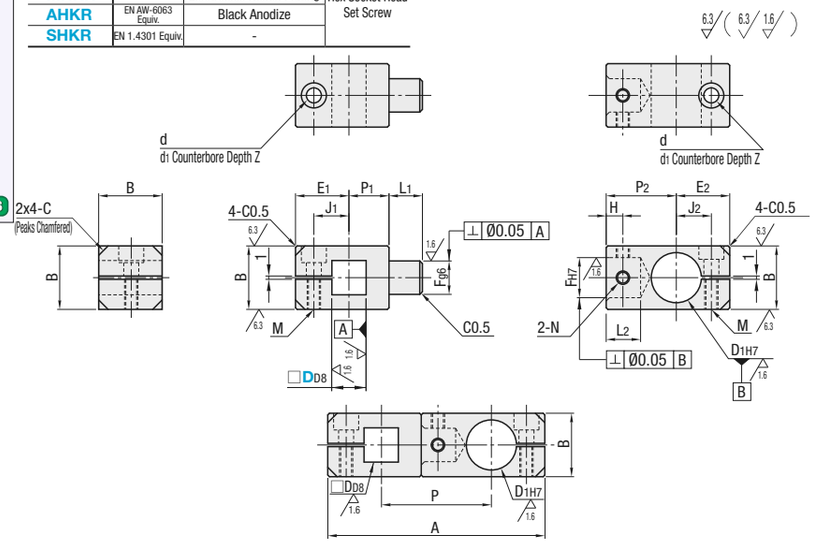

Part Number Type	DD8*		D1H7*		F	g6	H7	A	B	P	P1	P2	L1	L2	E1	E2	H	J1	J2	M (Coarse)	N (Coarse)	d	d1	Z	C
KHKR	8	+0.062 +0.040	8	+0.015 0	5	-0.004 -0.012	+0.012 0	43	12	19	7	12	6	6.3	12.5	11.5	3	8	7	M3	M3	3.5	6	3	2
MHKR	10		10					52	13	23	9	14			15	14		10	9	M4		4.5	7.5	5	
AHKR	12	+0.077 +0.050	12	+0.018 0				58	15	26	11	15			16.5	15.5		11	10						
SHKR	15		15		10	-0.005 -0.014	+0.015 0	67	19	33	12	21	10	10.3	18	16	5	12.5	10.5		M4				3
	20	+0.098 +0.065	20	+0.021 0				78	25	39	15	24			20.5	18.5		15	13						
	25		25					90	30	44	18	26			24	22		18	16	M5	M5	5.5	9	5.5	4

* The tolerance and perpendicularity of DD8 and D1H7 are the tolerances before slitting.
For mating, g6, f8 shaft tolerances of D1 are recommended. Tightening with a long wrench is recommended.

Ordering Example: Part Number
KHKR20

Example

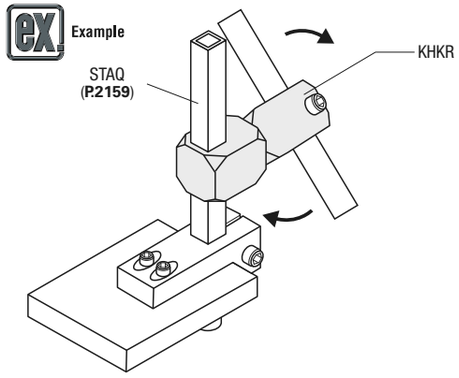

D	Unit Price			
	KHKR	MHKR	AHKR	SHKR
8				
10				
12				
15				
20				
25				

Included Screw

D	Included Screw
8	M3-8, 2 pcs.
10	M4-8, 2 pcs.
12	M4-10, 2 pcs.
15	M4-12, 2 pcs.
20	M4-20, 2 pcs.
25	M5-20, 2 pcs.

Super Compact Strut Clamps

Vertical / Parallel Taps with Wing Knobs / Vertical / Parallel Taps

Features: Affordable and compact tapped strut clamps. Wing Knob helps easy setup changes.

Vertical/Parallel Taps with Wing Knobs

Type: Vertical Taps	Type: Parallel Taps	M Material	S Surface Treatment	A Accessory
AMNCC	AQMCC	EN AW-6061 Equiv.	Black Anodize	Wing Knob (Black)
-	AQMWC		Clear Anodize	Wing Knob (White)

* Head of Wing Knob: Nylon 66
Thread: SWRM-10 (Trivalent Chromate)

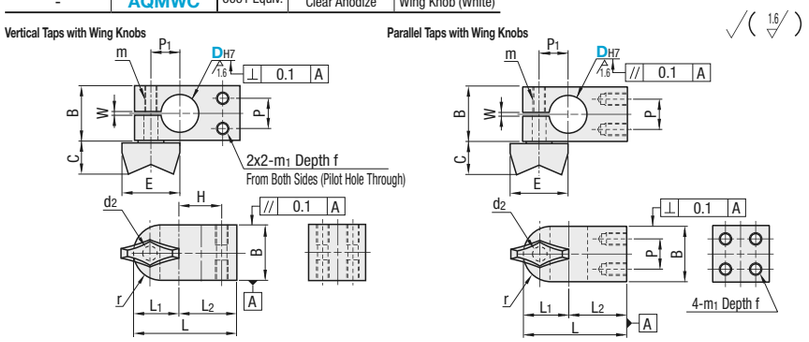

Part Number Type		DH7	B	L	L1	L2	r	H	m1	f	P	P1	W	d2	m	Wing Knob E	Wing Knob C	Unit Price Vertical Taps AMNCC	Unit Price Parallel Taps AQMCC, AQMWC
Vertical Taps AMNCC	Parallel Taps AQMCC AQMWC	6	+0.012 0	10	21.5	10.5	11	5	8	M2.6	4	5	6.5	1	3.5	M3	18	10.5	
		8	+0.015 0	12	25	11	14	6	10	M3	5	6	7						
		10		16	29.5	13.5	16	8	11	M4	6	8	8.5	1.5	4.5	M4			
		12	+0.018 0	18	32	14	18	9	13				9						
		15		22	41	18	23	11	17	M5	8	12	12		5.5	M5	28	15	

The tolerance and perpendicularity of DH7 are before slitting. For mating, g6, f8 shaft tolerances are recommended. Do not tighten the wing nut unless the shaft is set in D part.

Ordering Example — Part Number: AQMWC10

Vertical Taps / Parallel Taps

Type: Vertical Taps	Type: Parallel Taps	M Material	S Surface Treatment	A Accessory
AMNC	AQMC	Aluminum Alloy 6000 series	Black Anodize	Hex Socket Head Cap Screw
AMNW	AQMW		Clear Anodize	

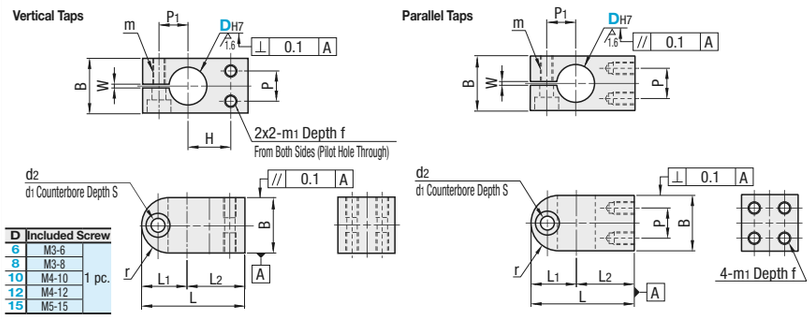

D	Included Screw	
6	M3-6	1 pc.
8	M3-8	
10	M4-10	
12	M4-12	
15	M5-15	

Part Number Type		DH7	B	L	L1	L2	r	H	m1	f	P	P1	W	m	d1	d2	S	Unit Price Vertical Taps AMNC, AMNW	Unit Price Parallel Taps AQMC, AQMW
Vertical Taps AMNC AMNW	Parallel Taps AQMC AQMW	6	+0.012 0	10	21.5	10.5	11	5	8	M2.6	4	5	6.5	1	M3	6.5	3.5	3.5	
		8	+0.015 0	12	25	11	14	6	10	M3	5	6	7						
		10		16	29.5	13.5	16	8	11	M4	6	8	8.5	1.5	M4	8	4.5	4.5	
		12	+0.018 0	18	32	14	18	9	13				9						
		15		22	41	18	23	11	17	M5	8	12	12		M5	9.5	5.5	5.5	

The tolerance and perpendicularity of DH7 are before slitting.
For mating, g6, f8 shaft tolerances are recommended. Tightening with a long wrench is recommended.

Ordering Example — Part Number: AMNC8

Strut Clamps

Vertical Taps With Clamp Lever / Parallel Taps With Clamp Lever

Features: Convenient for frequent setup changes. Vertically adjustable with a clamp lever without tools.

Vertical/Parallel Taps With Clamp Lever

Type: Vertical Taps Thin	Type: Parallel Taps Thin	Type: Parallel Taps Standard	M Material	S Surface Treatment
KMKU	KQKU	KQK	EN 1.0038 Equiv.	Black Oxide
MMKU	MQKU	MQK		Electroless Nickel Plating
AMKU	AQKU	AQK	EN AW-6063 Equiv.	Black Anodize
SMKU	SQKU	SQK	EN 1.4301 Equiv.	-

Clamp Lever (Refer to P.Z-1139)

DH7	Thin	Standard
10	CLDM5-16-M	CLDM6-16-M
12		CLDM6-20-M
15	CLDM5-20-M	CLDM8-20-M
20	CLDM6-25-M	CLDM8-25-M
25	CLDM6-32-M	CLDM10-32-M
30		CLDM10-40-M
35	CLDM8-40-M	CLDM12-40-M

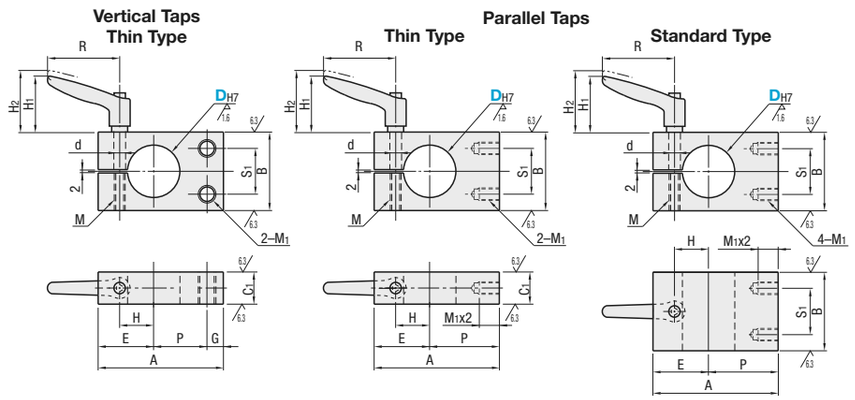

Vertical Taps Thin Type

Part Number Type		DH7	P	A	B	C1	E	G	H	S1	M1	M	d	Clamp Lever H1	Clamp Lever H2	Clamp Lever R	Unit Price KMKU	Unit Price MMKU	Unit Price AMKU	Unit Price SMKU
KMKU MMKU AMKU SMKU	10	+0.015 0	11	31	16	9	15	5	9	8	M4	M5	5.5	35	38.5	45				
	12	+0.018 0	13	34			16		10										-	
	15		17	45	22	12	20	8	12	12	M5									
	20	+0.021 0	20	52	28	16	22	10	15	16	M6	M6	6.6							
	25		23	58	32	19	25		18	20										
	30		27	66	38		29		21	25	M8									
	35	+0.025 0	30	72	45	22	32		24	28		M8	9	45.5	49	63		-	-	-

For the available sizes, refer to the price list. DH7 tolerance is before the slit machining.
For mating, g6, f8 shaft tolerances are recommended.

Parallel Taps Thin Type

Part Number Type		DH7	P	A	B	C1	E	H	S1	M1	M	d	Clamp Lever H1	Clamp Lever H2	Clamp Lever R	Unit Price KQKU	Unit Price MQKU	Unit Price AQKU	Unit Price SQKU
KQKU MQKU AQKU SQKU	10	+0.015 0	16	31	16	9	15	9	8	M4	M5	5.5	35	38.5	45				
	12	+0.018 0	18	34			16	10											
	15		25	45	22	12	20	12	12	M5									
	20	+0.021 0	30	52	28	16	22	15	16	M6	M6	6.6							
	25		33	58	32	19	25	18	20							-		-	
	30		37	66	38		29	21	25	M8							-		
	35	+0.025 0	40	72	45	22	32	24	28		M8	9	45.5	49	63	-	-		-

For the available sizes, refer to the price list. DH7 tolerance is before the slit machining.
For mating, g6, f8 shaft tolerances are recommended.

Parallel Taps Standard Type

Part Number Type		DH7	P	A	B	E	H	S1	M1	M	d	Clamp Lever H1	Clamp Lever H2	Clamp Lever R	Unit Price KQK	Unit Price MQK	Unit Price AQK	Unit Price SQK
KQK MQK AQK SQK	10	+0.015 0	16	32	16	16	10	8	M4	M6	6.6	35	38.5	45				
	12	+0.018 0	18	35		17	11											
	15		25	47	22	22	14	12	M5	M8	9	45.5	49	63				
	20	+0.021 0	30	54	28	24	16	16	M6									
	25		33	62	32	29	20	20		M10	11	55	59	78				
	30		37	68	40	31	22	25	M8								-	
	35	+0.025 0	40	77	45	37	26	28		M12	13	67	71	92				-

For the available sizes, refer to the price list. DH7 tolerance is before the slit machining.
For mating, g6, f8 shaft tolerances are recommended.

Ordering Example — Part Number: KMKU20, KQKU25, SQK15

Strut Clamps
Vertical Taps

Features: Clamp type of mounting a device perpendicular to post.

Vertical Taps

Type: Pitch Selectable Standard	Pitch Selectable Thin	Pitch Configurable Standard	Pitch Configurable Thin	M Material	S Surface Treatment	A Accessory
KMN	KMNU	KML	KMLU	EN 1.0038 Equiv.	Black Oxide	Hex Socket Head Cap Screw
MMN	MMNU	MML	MMLU		Electroless Nickel Plating	Hex Socket Head Cap Screw (Stainless Steel)
AMN	AMNU	-	-	Aluminum Alloy 6000 series	Black Anodize	Hex Socket Head Cap Screw
-	WMNU	-	-		Clear Anodize	Hex Socket Head Cap Screw (Stainless Steel)
SMN	SMNU	-	-	EN 1.4301 Equiv.	-	

CB screws are included with the black oxide and black anodized products, and SCB screws are included with the other products.

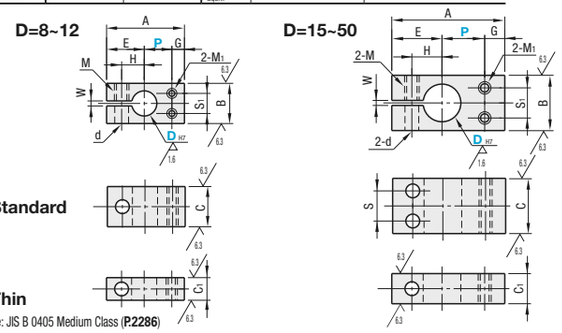

• P Dimension Tolerance: JIS B 0405 Medium Class (P.2286)

RoHS

Pitch Selectable

Part Number Type		D H7		P	A	B	C	C1	E	G	H	S1	M1	S	W	M	d
Standard KMN, MMN, AMN, SMN (D≤30)	Thin KMNU, MMNU, AMNU, WMNU, SMNU (D≤30)	8	+0.015 0	10	29	12	12	-	14	5	8	6	M3	-	2	M5	5.5
		10		11	31	16	16	9	15		9	8	M4	-			
		12	+0.018 0	13	34				16		10			-			
		15		17	45	22	22	12	20	8	12	12	M5	12			
		16						-									
		20	+0.021 0	20	52	28	28	16	22	10	15	16	M6	14		M6	6.6
		25		23	58	32	32	19	25		18	20		16			
		30		27	66	40	40		29		21	25	M8	20		M8	9
		35	+0.025 0	30	72	45	45	22	32		24	28					
KMN	KMNU	40	+0.025 0	35	79	50	50	25	34	10	26	30	M8	20	2	M8	9
		50		45	103	65	65	32	43	15	33	38	M10	32	3	M10	11

For the available sizes, refer to the price list. D=16 is only applicable to Standard Pitch (except Clear Anodize). D H7 tolerance is before the slit machining.
For mating, g6, f8 shaft tolerances are recommended. Tightening with a long wrench is recommended.

Pitch Configurable

Part Number Type		D H7		P Selection	A	B	C	C1	E	G	H	S1	M1	S	W	M	d
Standard KML, MML	Thin KMLU, MMLU	10	+0.015 0	20 30	A=P+E+G	16	16	9	15	5	9	8	M4	-	2	M5	5.5
		12	+0.018 0						16		10			-			
		15		25 30		22	22	12	20	8	12	12	M5	12			
		20	+0.021 0	30 40		28	28	16	22	10	15	16	M6	14		M6	6.6
		25				32	32	19	25		18	20		16			
		30		40 50		40	40		29		21	25	M8	20		M8	9
KML	KMLU	40	+0.025 0	40 50	A=P+E+G	50	50	25	34	10	26	30	M8	20	2	M8	9

For the available sizes, refer to the price list. D H7 tolerance is before the slit machining.
For mating, g6, f8 shaft tolerances are recommended. Tightening with a long wrench is recommended.

Ordering Example

Part Number	-	P
KMN10		
KMLU20	-	30

Unit Price

D	Pitch Selectable Standard KMN	MMN	AMN	SMN	Thin KMNU	MMNU	AMNU	WMNU	SMNU	Pitch Configurable Standard KML	MML	Thin KMLU	MMLU
8					-	-	-	-	-	-	-	-	-
10													
12													
15													
16					-	-	-	-	-	-	-	-	-
20													
25								-				-	
30													
35				-				-	-	-	-	-	-
40		-	-	-		-	-	-	-		-		-
50		-	-	-		-	-	-	-	-	-	-	-

Included Screw

D	Included Screw (Thin Type has 1 screw on each side.)
8	M5-12, 1 pc.
10	M5-15, 1 pc.
12	M5-15, 1 pc.
15	M5-20, 2 pcs.
16	M5-20, 2 pcs.
20	M6-25, 2 pcs.
25	M6-30, 2 pcs.
30	M8-35, 2 pcs.
35	M8-40, 2 pcs.
40	M8-45, 2 pcs.
50	M10-55, 2 pcs.

Strut Clamps
Parallel Taps

Features: Clamp type of mounting a device parallel to post.

Parallel Taps

Type: Pitch Selectable Standard	Pitch Selectable Thin	Pitch Configurable Standard	Pitch Configurable Thin	M Material	S Surface Treatment	A Accessory
KQM	KQMU	KQL	KQLU	EN 1.0038 Equiv.	Black Oxide	Hex Socket Head Cap Screw
MQM	MQMU	MQL	MQLU		Electroless Nickel Plating	Hex Socket Head Cap Screw (Stainless Steel)
AQM	AQMU	AQL	-	EN AW-6063 Equiv.	Black Anodize	Hex Socket Head Cap Screw
WQM	WQMU	-	-		Clear Anodize	Hex Socket Head Cap Screw (Stainless Steel)
SQM	SQMU	SQL	SQLU	EN 1.4301 Equiv.	-	

CB screws are included with the black oxide and black anodized products, and SCB screws are included with the other products.

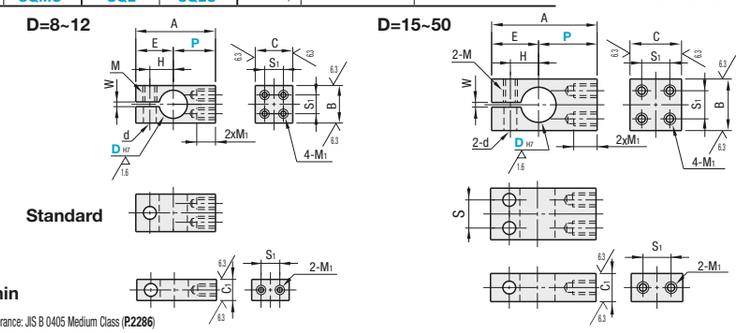

• P Dimension Tolerance: JIS B 0405 Medium Class (P.2286)

RoHS

Pitch Selectable

Part Number Type		D H7		P	A	B	C	C1	E	H	S1	M1	S	W	M	d
Standard KQM, MQM, AQM, WQM, SQM (D≤30)	Thin KQMU, MQMU, AQMU, WQMU, SQMU (D≤30)	8	+0.015 0	15	29	12	12	-	14	8	6	M3	-	2	M5	5.5
		10		16	31	16	16	9	15	9	8	M4	-			
		12	+0.018 0	18	34				16	10			-			
		15		25	45	22	22	12	20	12	12	M5	12			
		16						-								
		20	+0.021 0	30	52	28	28	16	22	15	16	M6	14		M6	6.6
		25		33	58	32	32	19	25	18	20		16			
		30		37	66	40	40		29	21	25	M8	20		M8	9
		35	+0.025 0	40	72	45	45	22	32	24	28					
KQM	KQMU	40	+0.025 0	45	79	50	50	25	34	26	30	M8	20	2	M8	9
		50		60	103	65	65	32	43	33	38	M10	32	3	M10	11

For the available sizes, refer to the price list. D=16 is only applicable to Standard Pitch (except Clear Anodize). D H7 tolerance is before the slit machining.
For mating, g6, f8 shaft tolerances are recommended. Tightening with a long wrench is recommended.

Pitch Configurable

Part Number Type		D H7		P Selection	A	B	C	C1	E	H	S1	M1	S	W	M	d
Standard KQL, MQL, AQL, SQL (D≤30)	Thin KQLU, MQLU, SQLU (D≤20)	10	+0.015 0	20 30	A=P+E	16	16	9	15	9	8	M4	-	2	M5	5.5
		12	+0.018 0	25 35					16	10			-			
		15		30 40		22	22	12	20	12	12	M5	12			
		20	+0.021 0	25 40		28	28	16	22	15	16	M6	14		M6	6.6
		25		40 50		32	32	19	25	18	20		16			
		30		50 60		40	40		29	21	25	M8	20		M8	9
		35	+0.025 0			45	45	22	32	24	28					
KQL	KQLU	40	+0.025 0	50 60	A=P+E	50	50	25	34	26	30	M8	20	2	M8	9
		50		50 70		65	65	32	43	33	38	M10	32	3	M10	11

For the available sizes, refer to the price list. D H7 tolerance is before the slit machining. For mating, g6, f8 shaft tolerances are recommended. Tightening with a long wrench is recommended.

Ordering Example

Part Number	-	P
MQM12		
KQLU25	-	40

Unit Price

D	Pitch Selectable Standard KQM	MQM	AQM	WQM	SQM	Thin KQMU	MQMU	AQMU	WQMU	SQMU	Pitch Configurable Standard KQL	MQL	AQL	SQL	Thin KQLU	MQLU	SQLU
8						-	-	-	-	-	-	-	-	-	-	-	-
10																	
12																	
15													-				
16				-		-	-	-	-	-	-	-	-	-	-	-	-
20																	
25									-					-			-
30																	-
35					-	-		-	-	-				-			-
40		-	-	-	-		-	-	-	-		-	-	-	-	-	-
50		-	-	-	-		-	-	-	-		-	-	-	-	-	-

Included Screw

D	Included Screw (Thin Type has 1 screw on each side.)
8	M5-12, 1 pc.
10	M5-15, 1 pc.
12	M5-15, 1 pc.
15	M5-20, 2 pcs.
16	M5-20, 2 pcs.
20	M6-25, 2 pcs.
25	M6-30, 2 pcs.
30	M8-35, 2 pcs.
35	M8-40, 2 pcs.
40	M8-45, 2 pcs.
50	M10-55, 2 pcs.

Strut Clamps

Vertical / Parallel Taps, Split

Features: Post-assembly mounting onto Posts for Stands in structures.

Vertical Taps, Split Parallel Taps, Split

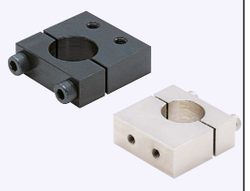

RoHS

Type: Vertical Taps	Type: Parallel Taps	M Material	S Surface Treatment	A Accessory
KRTP	KRPP	EN 1.0038 Equiv.	Black Oxide	Hex Socket Head Cap Screw
MRTP	MRPP		Electroless Nickel Plating	Hex Socket Head Cap Screw (Stainless Steel)
ARTP	ARPP	EN AW-6063 Equiv.	Black Anodize	Hex Socket Head Cap Screw
SRTP	SRPP	EN 1.4301 Equiv.	-	Hex Socket Head Cap Screw (Stainless Steel)

6.3 / (6.3 / 1.6 /)

Vertical Taps

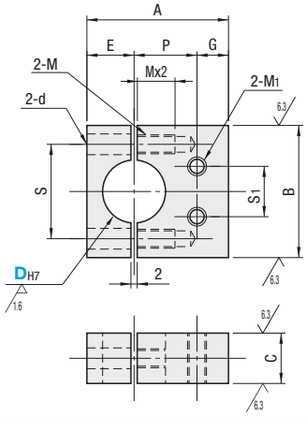

Parallel Taps

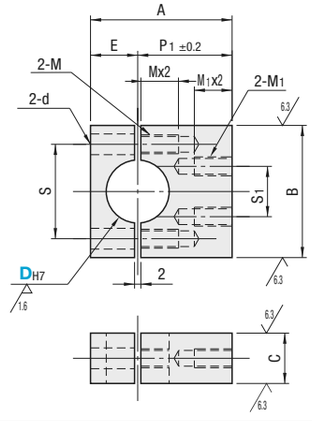

Part Number Type: Vertical Taps	Part Number Type: Parallel Taps	D	DH7	A	B	C	E	P	P1	G	S	d	M (Coarse)	S1	M1 (Coarse)
KRTP	KRPP	10	+0.015 0	24	25	9	8	11	16	5	18	4.5	M4	8	M4
MRTP	MRPP	12	+0.018 0	28	28		10	13	18		20				
ARTP	ARPP	15		37	35	12	12	17	25	8	24	5.5	M5	12	M5
SRTP	SRPP	20	+0.021 0	45	45	16	15	20	30	10	30	6.6	M6	16	M6
		25		51	50	19	18	23	33		35			20	
		30		60	60		23	27	37		44	9	M8	25	M8
		35	+0.025 0	66	65	22	26	30	40		50			28	

DH7 tolerance is before the slit machining. Bore diameter 35 is not available in ARTP type.

Ordering Example

Part Number
KRTP15
MRPP20

Example

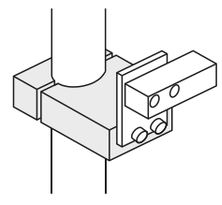

D	Unit Price KRTP KRPP	ARTP	ARPP	MRTP MRPP	SRTP SRPP
10					
12					
15					
20					
25					
30					
35		-			

Bore diameter 35 is not available in ARTP type.

Included Screw

D	Included Screw	
10	M4-15	2 pcs.
12	M4-18	
15	M5-20	
20	M6-25	
25	M6-30	
30	M8-35	
35	M8-40	

Alterations

Part Number	-	(ALW)
ARTP20	-	ALW

Alteration	Code	Spec.
Clear Anodize	ALW	Changes ARTP and ARPP from black anodize to clear anodize. Applicable to ARTP and ARPP. Stainless steel screws are included.

Strut Clamps

Anti-Rotation, Parallel Taps

Features: Z direction is adjustable while preventing the rotating direction movements such as camera mounting.

Anti-Rotation, Parallel Taps

RoHS

Type: Set	Type: Strut Clamp only	Post: M Material	Post: S Surface Treatment	Strut Clamp: M Material	Strut Clamp: S Surface Treatment
KBYKS	KBYK	EN 1.1191 Equiv.	Electroless Nickel Plating	EN 1.0038 Equiv.	Black Oxide
KBYMS	KBYM				Electroless Nickel Plating
KBYSS	KBYS	EN 1.4301 Equiv.	-	EN 1.4301 Equiv.	-

A set includes 1 pc. of clamp and 1 pc. of post. Use the Strut Clamp on this page with the post included in the set.

Strut Clamps

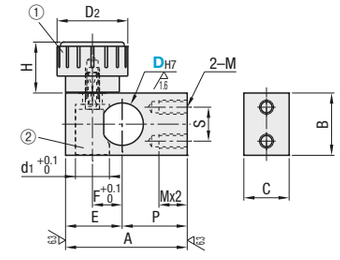

Post

25 / (6.3 / 1.6 /)

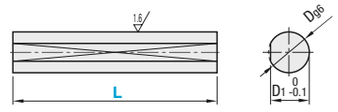

No.	Name of Parts	M Material
①	Knurled Knob Screw	ABS / Brass (Insert)
②	Clamp	EN CW614N Equiv. (No Cadmium)

Part Number Type: Set	Part Number Type: Strut Clamp only	D	L	D1	A	B	C	S	M	P	E	F	d1	H	D2
KBYKS	KBYK	10	100 (D≤20)	9	35	19	12	10	M5	20	15	7.5	10	18	25
KBYMS	KBYM	12	150 (D≤20)	11	36						16	8.5			
KBYSS	KBYS	15	200	14	45	*22(25)	16	12		25	20	10.5	12		
		20	250 (12≤D)	19	47	25			M6		22	13			32
		25	300 (12≤D)	23.5	55	32		16		30	25	15			

*When D direction of KBYS (EN 1.4301 Equiv.) is 15, B=25.

Ordering Example

Part Number	-	L
KBYMS15	-	250
KBYK20		

Set

D	Unit Price KBYKS L100	L150	L200	L250	L300	KBYMS L100	L150	L200	L250	L300	KBYSS L100	L150	L200	L250	L300
10				-	-				-	-				-	-
12															
15															
20															
25	-	-				-	-				-	-			

Strut Clamp only

D	Unit Price KBYK	KBYM	KBYS
10			
12			
15			
20			
25			

Reference Data on Retention Force

Measured values with D=15 as shown below.
For EN 1.0038 Equiv.: 580N
For EN 1.4301 Equiv.: 530N
*The above are actual measurements and not guaranteed.

<<Measuring Method for Retention Force>>

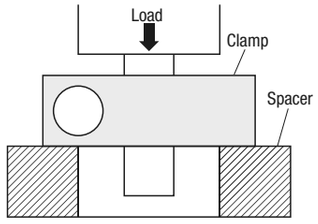

* Standard Tightening Torque 0.5 Series (N・m)
For D10, 12 and 15: 1.5
For D20 and 25: 2.6

Example

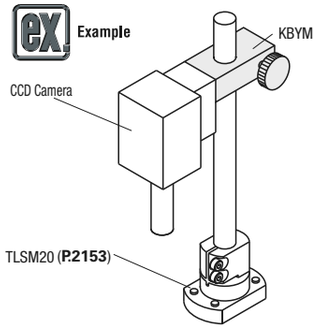

Strut Clamps

Square & Round / Square & Square, Perpendicular Configuration

Features: Post clamps that height adjusts while preventing rotations by combining with Square tubes (**P.2159**) and Stand Brackets (**P.2160**).Combined with Stand-Up Brackets, Strut Clams can prevent rotation while adjusting height. For tubes / pipes and rods usable in sets, see **P.2159**.

Square & Round, Perpendicular Configuration

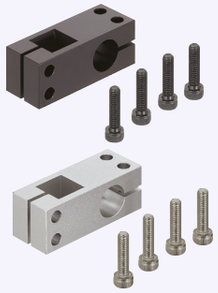

Square & Square, Perpendicular Configuration

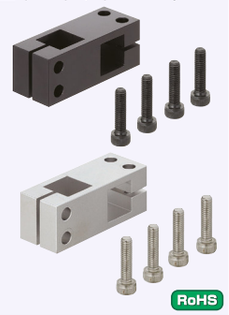

RoHS

Type: Square & Round, Perpendicular Configuration	Type: Square & Square, Perpendicular Configuration	M Material	S Surface Treatment	A Accessory
BLQD	BLQQD	EN 1.1191 Equiv.	Black Oxide	Hex Socket Head Cap Screw
NLQD	NLQQD		Electroless Nickel Plating	
ALQD	ALQQD	EN AW-6063 Equiv.	Black Anodize	
HLQD	HLQQD		Clear Anodize	
SLQD	SLQQD	EN 1.4301 Equiv.	-	

Accessory: CB screws (**P.2-171**) are included with black oxide/black anodized products, and SCB screws (**P.2-173**) are included with the other products, respectively.

Square & Round, Perpendicular Configuration **Square & Square, Perpendicular Configuration**

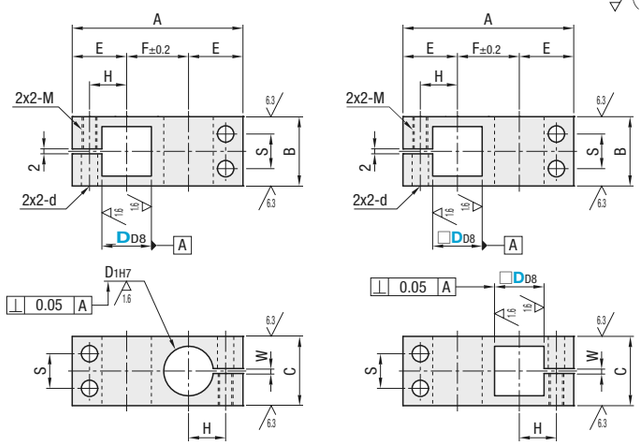

When D=10 or 12, there is no S dimension. There is only 1 screw at the center for tightening.

Part Number Type		DD8	D1H7		A	B	C	E	F	H	S	M (Coarse)	d	W
Square & Round, Perpendicular Configuration	Square & Square, Perpendicular Configuration													
BLQD NLQD ALQD HLQD SLQD	BLQQD NLQQD ALQQD HLQQD SLQQD	10	+0.077 +0.050	10 +0.015 0	45	16	16	15	15	9	-	M5	5.5	2
		12		12 +0.018 0	49	16	16	16	17	10	-			
		15		15	57	22	22	18	21	12	11			
		20	+0.098 +0.065	20 +0.021 0	69	28	28	22	25	15	14	M6	6.6	
		25		25	83	32	32	25	33	18	16			

The tolerance and perpendicularity of DD8 and D1H7 are the tolerances before slitting.
Recommended DD8 tolerance of mating shafts is 0 - -0.12 and D1H7 tolerance g6 and g8 respectively. Tightening with a long wrench is recommended.

Ordering Example

Part Number
ALQD20
SLQQD10

Example

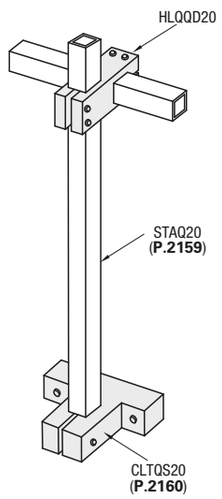

D	Unit Price: Square & Round, Perpendicular Configuration: EN 1.1191 Equiv. BLQD	NLQD	EN AW-6063 Equiv. ALQD	HLQD	EN 1.4301 Equiv. SLQD	Square & Square, Perpendicular Configuration: EN 1.1191 Equiv. BLQQD	NLQQD	EN AW-6063 Equiv. ALQQD	HLQQD	EN 1.4301 Equiv. SLQQD
10										
12										
15										
20										
25										

Strut Clamps

Vertical / Parallel Taps, Square Hole

Features: Post clamps that height adjusts while preventing rotations by combining with Square tubes (**P.2159**) and Stand Brackets (**P.2160**). For tubes/pipes and rods usable in sets, see **P.2159**.

Vertical Taps, Square Hole

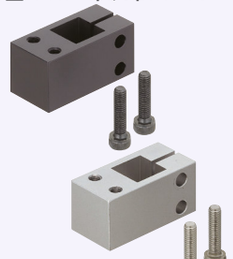

Parallel Taps, Square Hole

RoHS

Type: Vertical Taps	Type: Parallel Taps	M Material	S Surface Treatment	A Accessory
BMNQ	BQMQ	EN 1.1191 Equiv.	Black Oxide	Hex Socket Head Cap Screw
NMNQ	NQMQ		Electroless Nickel Plating	
AMNQ	AQMQ	EN AW-6063 Equiv.	Black Anodize	
WMNQ	WQMQ		Clear Anodize	
SMNQ	SQMQ	EN 1.4301 Equiv.	-	

Accessory: CB screws (**P.2-171**) are included with black oxide/black anodized products, and SCB screws (**P.2-173**) are included with the other products, respectively.

Vertical Taps, Square Hole **Parallel Taps, Square Hole**

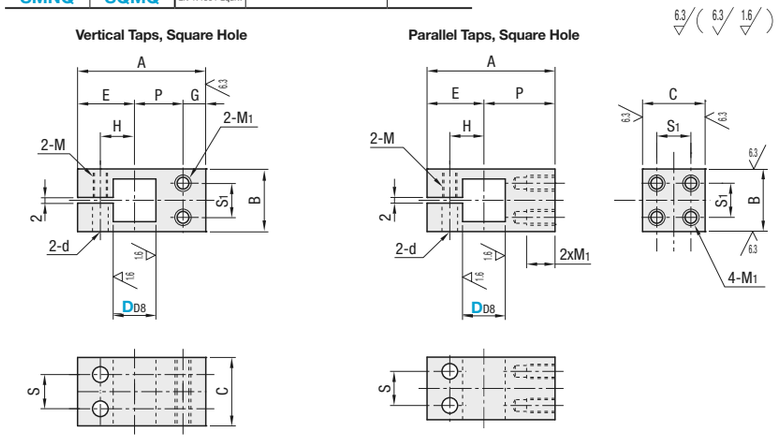

When D=10 or 12, there is no S dimension. There is only 1 screw at the center for tightening.

Vertical Taps, Square Hole

Part Number Type	DD8		P	A	B	C	E	G	H	S1	M1	S	M	d	Unit Price BMNQ	NMNQ	AMNQ	WMNQ	SMNQ
BMNQ NMNQ AMNQ WMNQ SMNQ	10	+0.077 +0.050	11	31	16	16	15	5	9	8	M4	-	M5	5.5					
	12		13	34	16	16	16	5	10	8									
	15		17	45	22	22	20	8	12	12	M5	12							
	20	+0.098 +0.065	20	52	28	28	22	10	15	16	M6	14	M6	6.6					
	25		23	58	32	32	25	10	18	20		16							

Tolerance of DD8 is the tolerance before slitting.
Recommended DD8 tolerance of mating shafts is 0 - -0.12. Tightening with a long wrench is recommended.

Parallel Taps, Square Hole

Part Number Type	DD8		P	A	B	C	E	H	S1	M1	S	M	d	Unit Price BQMQ	NQMQ	AQMQ	WQMQ	SQMQ
BQMQ NQMQ AQMQ WQMQ SQMQ	10	+0.077 +0.050	16	31	16	16	15	9	8	M4	-	M5	5.5					
	12		18	34	16	16	16	10	8									
	15		25	45	22	22	20	12	12	M5	12							
	20	+0.098 +0.065	30	52	28	28	22	15	16	M6	14	M6	6.6					
	25		33	58	32	32	25	18	20		16							

Tolerance of DD8 is the tolerance before slitting.
Recommended DD8 tolerance of mating shafts is 0 - -0.12. Tightening with a long wrench is recommended.

Ordering Example

Part Number
AMNQ15
SQMQ20

Example

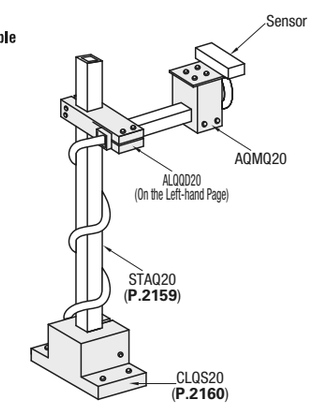

Strut Clamps
Slotted Hole / L-Shaped

Features: Slotted holes enable fine adjustments when mounting.

Slotted Hole

Type	M Material	S Surface Treatment	A Accessory
KMCU	EN 1.0038 Equiv.	Black Oxide	Hex Socket Head Cap Screw
MMCU	EN 1.0038 Equiv.	Electroless Nickel Plating	
AMCU	EN AW-6063 Equiv.	Black Anodize	
SMCU	EN 1.4301 Equiv.	-	

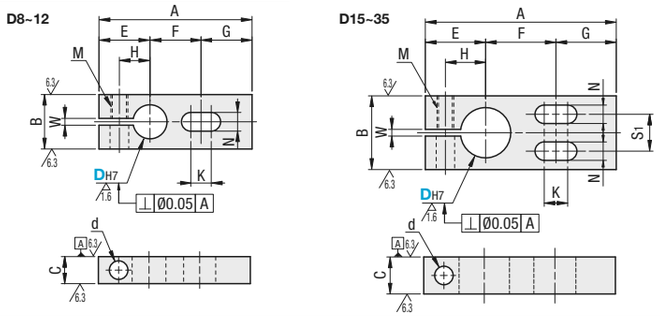

Part Number Type	DH7		A	B	C	E	F	G	H	K	M	N	S1	d	W	Unit Price KMCU	Unit Price AMCU	Included Screw	Unit Price MMCU	Unit Price SMCU	Included Screw
KMCU MMCU AMCU SMCU	8	+0.015 0	42	12	8	14	14	14	8	8.5	M5	5.5	-	5.5	2			CB5-10, 1pc.			SCB5-10, 1pc.
	10		45	16	9	15	15	15	9	9.5			-					CB5-15, 1pc.			SCB5-15, 1pc.
	12	+0.018 0	49	16	9	16	17	16	10	10.5			-					CB5-15, 1pc.			SCB5-15, 1pc.
	15		57	22	12	18	21	18	12	12.5			11					CB5-20, 1pc.			SCB5-20, 1pc.
	20	+0.021 0	69	28	16	22	25	22	15	15.5	M6	6.5	14	6.6				CB6-25, 1pc.			SCB6-25, 1pc.
	25		83	32	19	25	33	25	18	18.5			16					CB6-30, 1pc.			SCB6-30, 1pc.
	30		95	40	19	29	37	29	21	20	M8	9	20	9				CB8-35, 1pc.			SCB8-35, 1pc.
	35	+0.025 0	104	45	22	32	40	32	24	23			22					CB8-40, 1pc.			SCB8-40, 1pc.

DH7 tolerance is before the slit machining. For mating, g6, f8 shaft tolerances are recommended. Tightening with a long wrench is recommended.

L-Shaped

Type	M Material	S Surface Treatment	A Accessory
KLQK	EN 1.0038 Equiv.	Black Oxide	Hex Socket Head Cap Screw
MLQM		Electroless Nickel Plating	
ALQA	EN AW-6063 Equiv.	Black Anodize	
SLQS	EN 1.4301 Equiv.	-	

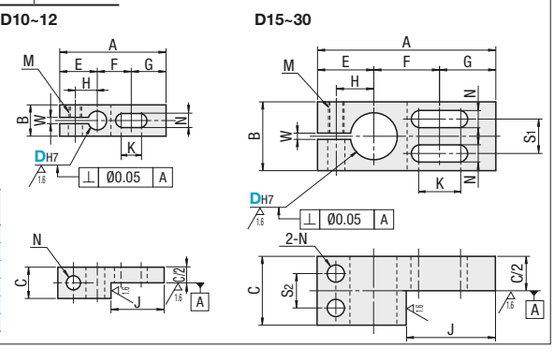

Included Screw

D	KLQK ALQA	MLQM SLQS
10	CB5-25, 1 pc.	SCB5-25, 1 pc.
12	CB5-30, 1 pc.	SCB5-30, 1 pc.
15	CB5-35, 2 pcs.	SCB5-35, 2 pcs.
20	CB6-35, 2 pcs.	SCB6-35, 2 pcs.
25	CB6-35, 2 pcs.	SCB6-35, 2 pcs.
30	CB8-40, 2 pcs.	SCB8-40, 2 pcs.

Part Number Type	DH7		A	B	C	E	F	G	H	J	K	M	N	S1	S2	W	Unit Price KLQK	Unit Price MLQM	Unit Price ALQA	Unit Price SLQS
KLQK MLQM ALQA SLQS	10	+0.015 0	45	16	16	15	15	15	9	22.5	9.5	M5	5.5	-	-	2				
	12	+0.018 0	49			16	17	16	10	24.5	10.5			-	-					
	15		57	22	22	18	21	18	12	28.5	12.5			11	11					
	20	+0.021 0	69	28	28	22	25	22	15	34.5	15.5	M6	6.5	14	14					
	25		83	32	32	25	33	25	18	41.5	18.5			16	16					
	30	+0.021 0	95	40	40	29	37	29	21	47.5	20	M8	9	20	20					

The tolerance and perpendicularity of DH7 are before slitting.
For mating, g6, f8 shaft tolerances are recommended. Tightening with a long wrench is recommended.

Ordering Example

Part Number
MMCU15
KLQK15

Example

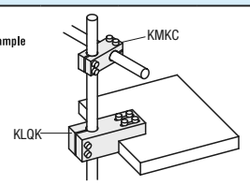

Press and fix the L-shaped portion.

Strut Clamps / Bar Clamps
Arm

Features: Combined with Strut Clamps, mounted posts can be adjusted in a circumferential direction.

Strut Clamps

Type	M Material	S Surface Treatment	A Accessory
KLKA	EN 1.0038 Equiv.	Black Oxide	Hex Socket Head Cap Screw
MKA		Electroless Nickel Plating	
ALKA	Aluminum Alloy 6000 series	Black Anodize	
SLKA	EN 1.4301 Equiv.	-	

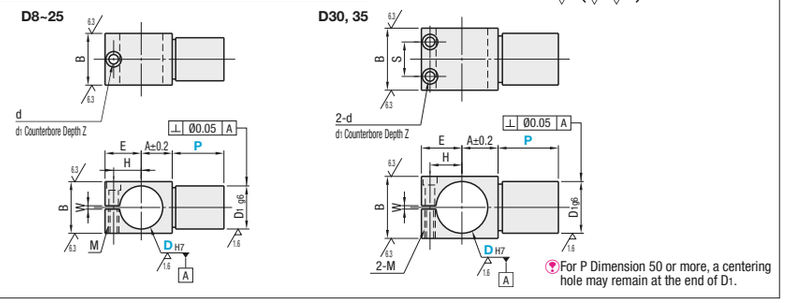

For P Dimension 50 or more, a centering hole may remain at the end of D1.

Part Number Type	DH7		P Selection	D1g6		A	B	E	H	M	d	d1	Z	S	W	Included Screw	Unit Price KLKA	Unit Price MKA	Unit Price ALKA	Unit Price SLKA
KLKA MKA ALKA SLKA (D≤30)	8	+0.015 0	12 30 50	8	-0.005 -0.014	7	12	10.5	7	M3	3.5	6	3	-	2	CB3- 8, 1 pc.				
	10		13 30 50	10		9	13	13	9	M4	4.5	7.5	4			CB4- 8, 1 pc.				
	12	+0.018 0		12	-0.006 -0.017	11	15	14.5	10							CB4-10, 1 pc.				
	15		19 30 50	15		12	19	15	10.5							CB4-15, 1 pc.				
	20	+0.021 0	25 50 70	20	-0.007 -0.020	15	25	17.5	13							CB4-25, 1 pc.				
	25		30 50 70	25		18	30	21	16							CB5-30, 1 pc.				
	30		35 50 70	30		21	36	23.5	18.5	M5	5.5	9	5	20		CB5-35, 2 pcs.				
	35	+0.025 0	40 70 90	35	-0.009 -0.025	24	40	26.5	21					24		CB5-40, 2 pcs.				-

D Dimension for SLKA is available up to 30. DH7 tolerance is before the slit machining. For mating, g6, f8 shaft tolerances are recommended. Tightening with a long wrench is recommended.

Ordering Example

Part Number	-	P
MKA10	-	30

Example

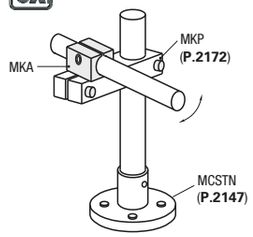

Features: Bar Clamps can be used as a guide handle in combination with Strut Clamps.

Bar Clamps

Type	M Material	S Surface Treatment	A Accessory
BCLB	EN 1.0038 Equiv.	Black Oxide	Hex Socket Head Cap Screw
BCLM		Electroless Nickel Plating	
BCLA	EN AW-6063 Equiv.	Black Anodize	
BCLS	EN 1.4301 Equiv.	-	

* Included Screw: Black oxide and black anodize products have screw of same surface treatment, and electroless nickel plating and Stainless Steel products have stainless screw.

Included Screw

D	Screw Size
6	M3-8
8	M4-8
10	M5-10
12	M5-10
13	M5-15
15	M6-15
16	M6-15
20	M6-20

Example

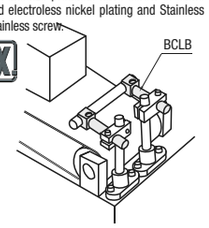

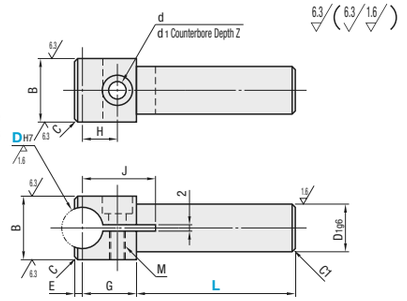

For L Dimension 50 or more, a centering hole may remain at the end of D1.

Part Number Type	DH7		L Selection	B	D1g6		G	E	C	H	M	d	d1	Z	J	Unit Price BCLB	Unit Price BCLM	Unit Price BCLA	Unit Price BCLS
BCLB BCLM BCLA BCLS	6	+0.012 0	25 40	12	8	-0.005 -0.014	14	1	1	8	M3	3.4	6.5	3.5	17			-	
	8	+0.015 0		14	10		15	1.5		9	M4	4.5	8	4.5	19				
	10		30 50	16	12	-0.006 -0.017	16	2		10	M5	5.5	9.5	5.5	22				
	12			18	12		17	2.5		11					24				
	13	+0.018 0		20	15		17	2.5		11					27				
	15		50 70	23	16		19	2.5		12					31			-	
	16			25	20	-0.007 -0.020	20	3	2	13	M6	6.6	11	6.5	34			-	
	20	+0.021 0		30			21			14					35				

DH7 tolerance is before the slit machining.

Ordering Example

Part Number	-	L
BCLB16	-	70

Flexible Clamps / Holder Pipes

■**Features:** A circular post and a hex post can be clamped together.

■ Flexible Clamps

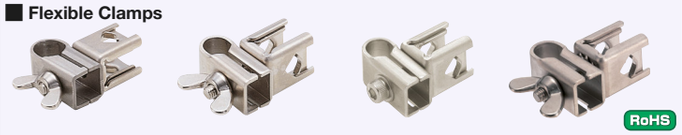

RoHS

Type			M Material	S Surface Treatment
Wing Nut	Hex Socket Head Cap Screw	Wing Nut High Torque		
FLEC	FLEB	FLHC	EN 1.0320 Equiv. (hot coiled)	Electroless Nickel Plating
FLES	FLEBS	-	EN 1.4301 Equiv.	-

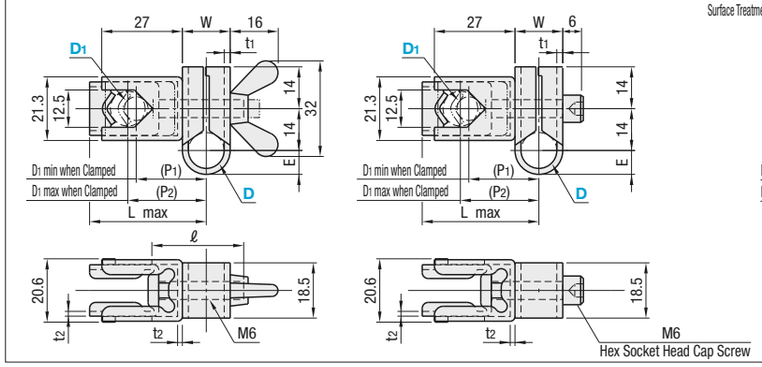

Part Number Type		D	D1 Nominal	D1 Clamping Range	W	E	P1(min)	P2(max)	Lmax	ℓ	t1	t2 EN 1.0320 Equiv. (hot coiled)	t2 EN 1.4301 Equiv.	Unit Price FLEC	FLES	FLEB	FLEBS	FLHC
Wing Nut FLEC FLES	Hex Socket Head Cap Screw FLEB FLEBS	12	8	Ø8~12	16	8	(23.5)	(26.3)	39.1	30	2	1.6	1.5					-
		15			19	9.5	(25.0)	(27.8)	40.6	35								-
Wing Nut High Torque FLHC		12	8	Ø8~12	16	8	(24.9)	(27.7)	40.5	30				-	-	-	-	
		15			19	9.5	(26.4)	(29.2)	42	35				-	-	-	-	

Do not tighten the wing nut and the hex socket head cap screw unless the shaft is set in D part. Excessive tightening can cause deformation.
Recommended Diameter Tolerances of Mating Posts: ±0.05 for Wing Nuts; $^{+0.05}_{-0.1}$ for Hex Socket Head Cap Screws.

Ordering Example

Part Number	-	D1
FLEC12	-	8

■ Features:

1. Two axes can be clamped by tightening one wing nut.
2. Flexible clamping is possible as shown in the right figure.

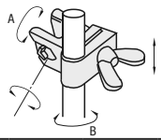

<Reference> Moment Capacity Data

Data	Sample / Tightening Conditions	Standard: EN 1.0320 Equiv. (hot coiled) FLEC12-8 FLEB	FLEC15-8 FLEB	Standard: Stainless Steel FLES12-8 FLEBS	FLES15-8 FLEBS	High Torque: EN 1.0320 Equiv. (hot coiled) FLHC12-8	FLHC15-8
A (Ncm)	1	102.9	235.2	132.3	161.7	232.3	313.1
	2	220.5	470.4	249.9	294.0	429.2	502.7
B (Ncm)	1	205.8	1176 or More	176.4	1176 or More	285.2	1176 or More
	2	294.0		367.5		352.8	

The above data is an example of actual measurements and not guaranteed.
A and B correspond with A and B in the above figure.
The data show the results of tightening with Hex Nuts instead of Wing Nuts. The posts are EN 1.1191 Equiv. polished material.
Tightening Condition 1: Tightening Torque 100Ncm
Tightening Condition 2: Tightening Torque 200Ncm

■**Features:** Can be used as holders for opto-electric sensors and proximity sensors.

■ Holder Pipes

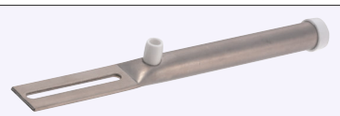

RoHS

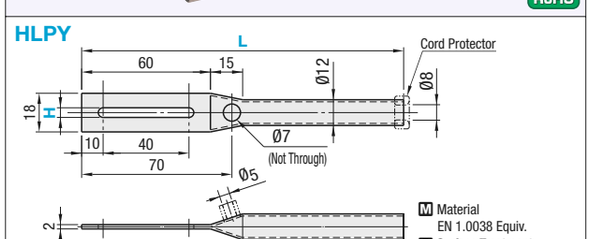

A cable protector is included.

Part Number Type	H	L		Unit Price L150	L250
HLPY	4.5	150	250		
	5.5				

Ordering Example

Part Number	-	L
HLPY4.5	-	150

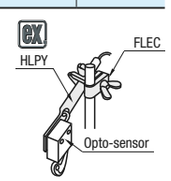

Flexible Clamps

Compact

■**Features:** Easy mounting with one screw. Suitable for mounting light loads.

■ Flexible Clamps

RoHS

Type	M Material	S Surface Treatment
FLYC	EN 1.0320 Equiv. (hot coiled)	Black Oxide
FLYM	EN 1.0320 Equiv. (hot coiled)	Electroless Nickel Plating
FLYS	EN 1.4301 Equiv.	-

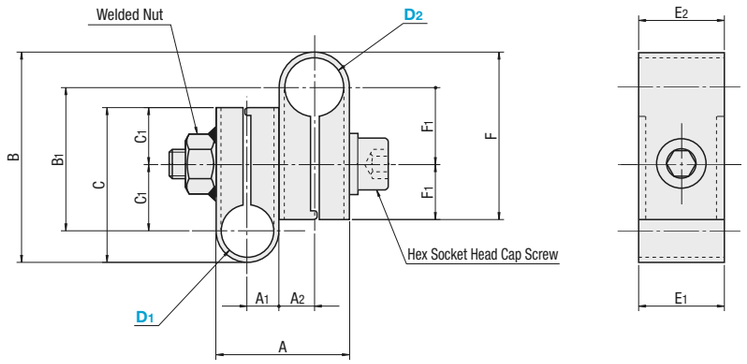

Part Number Type	D1	D2 Selection	A	A1	A2	B	B1	C	C1	E1	E2	F	F1	Welded Nut	Hex Socket Head Cap Screw
FLYC FLYM FLYS	8	8	22.4	5.6	5.6	40.6	29.4	35	14.7	13	13	35	14.7	M6	M6×30
		10	24.4	5.6	6.6	41.1	28.9	35	14.7	13	15	35	14.2		M6×35
	10	10	26.4	6.6	6.6	41.6	28.4	35	14.2	15	15	35	14.2		M6×40
		12	29.2	6.6	8	42.8	28.2	35	14.2	15	18	36	14		M6×40
	12	12	32	8	8	44	28	36	14	18	18	36	14		M6×40
		15	35	8	9.5	45.3	27.7	36	14	18	18	37	13.7		M6×45
	15	15	38	9.5	9.5	46.6	27.4	37	13.7	18	18	37	13.7		M6×45
		20	43.6	9.5	12.3	57	35	37	13.7	18	23	55	21.3		M6×55
	20	20	49.2	12.3	12.3	67.4	42.6	55	21.3	23	23	55	21.3	M8	M8×65
		25	54.2	12.3	14.8	72.6	45.4	55	21.3	23	25	63	24.1		M8×70
	25	25	59.2	14.8	14.8	77.8	48.2	63	24.1	25	25	63	24.1		M8×75

Recommended Diameter Tolerance of Mating Post: +0.1 ~ -0.3.

Ordering Example

Part Number	-	D2
FLYC10	-	12

D1	D2	Unit Price FLYC	FLYM	FLYS
8	8			
	10			
10	10			
	12			
12	12			
	15			
15	15			
	20			
20	20			
	25	-		
25	25			

Example

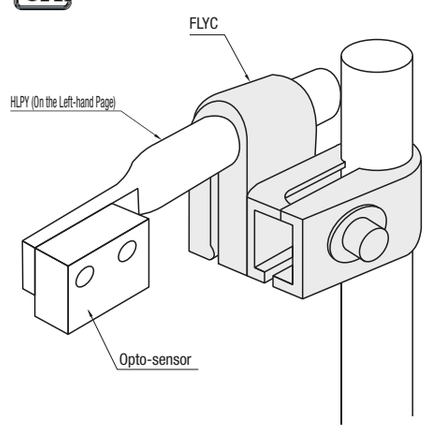

Hollow Stands
Set Screw Type

Features: Hollow Stands used as a equipment base for touch panel or box. Its Overall length can be specified freely.

Set Screw

Type: Round Flanged Set Bracket 2 pcs.	Round Flanged Set Bracket 1 pc.	Round Flanged Bracket only	Compact Flanged Set Bracket 2 pcs.	Compact Flanged Set Bracket 1 pc.	Compact Flanged Bracket only	Hollow Stand only	M Material Hollow	M Material Bracket	S Surface Treatment	A Accessory
PSEW	PSE	PSEF	WPSEW	WPSE	WPSEF	PPEW	EN 1.0480 Equiv.	EN 1.0038 Equiv.	Trivalent Chromate	Set Screw
PSEWM	PSEM	PSEFM	WPSEWM	WPSEM	WPSEFM	PPEWM	EN 1.0480 Equiv.	EN 1.0038 Equiv.	Electroless Nickel Plating	
PSEWK	PSEK	-	WPSEWK	WPSEK	-	-	EN 1.0480 Equiv.	EN 1.0038 Equiv.	Black Oxide	
PSEWS	PSES	PSEFS	-	-	-	PPEWS	EN 1.4301 Equiv.	EN 1.4301 Equiv.	-	

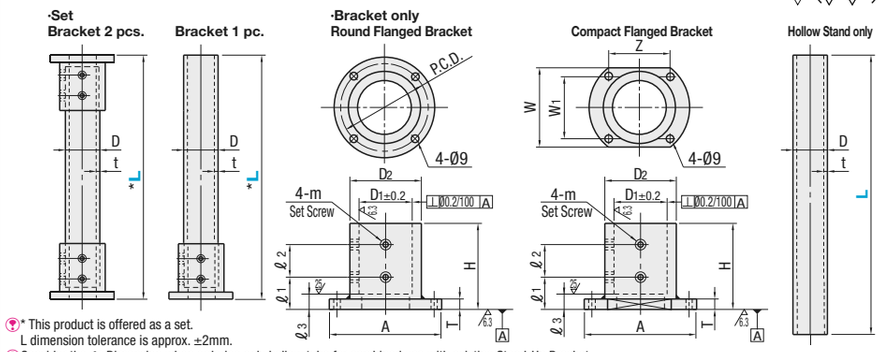

* This product is offered as a set.
L dimension tolerance is approx. ±2mm.
Consider the ℓ3 Dimension when ordering only hollow tube for combined use with existing Stand-Up Bracket.

RoHS

Part Number Type	Nominal	D		L 1mm Increment	t	D1	D2	A	P.C.D.	T	H	ℓ1	ℓ2	M (Coarse)	ℓ3	W	Z	W1
(Set) (Bracket only) Trivalent Chromate PSE PSEW PSEF; Electroless Nickel Plating PSEM PSEWM PSEFM; Black Oxide PSEK PSEWK	30	30	±0.40	200~800	4.0	30.5	42.7	90	70	10	50	25	15	M6	15	56	56	34
	40	40		200~800		40.5	54.0	100	80		60		25			64	62	44
	50	50.8	±0.41	200~1000		51.5	65.0	110	90		75	30	30			74	74	50
Trivalent Chromate WPSE WPSEW WPSEF; Electroless Nickel Plating WPSEM WPSEWM WPSEFM; Black Oxide WPSEK WPSEWK	60	60.5	±0.49	200~1000		61.0	76.3	120	100	12	90	35	40	M8	20	90	76	70
	70	70	±0.56	300~1000	6.0	70.5	89.1	130	110		105	40	45			100	80	80
(Hollow Stand only) Trivalent Chromate PPEW; Electroless Nickel Plating PPEWM	80	82.6	±0.66	300~1000		83.5	101.6	140	120		120		60			110	86	90
	100	101.6	±0.80	350~1000		102.6	120.0	160	140		150		90			130	94	110
(Set) (Bracket only) Bracket 1 pc. Bracket 2 pcs. Stainless Steel PSES PSEWS PSEFS	30	32	±0.32	200~800	3.0	32.5	42.7	90	70	10	50	25	15	M6	15	-	-	-
	40	42.7	±0.43	200~800		43.0	50.8	100	80		60		25					
	50	50.8	±0.51	200~1000		51.5	60.5	110	90		75	30	30					
(Hollow Stand only) PPEWS	60	60.5	±0.61	200~1000		61.0	76.3	120	100	12	90	35	40	M8	20			
	70	76.3	±0.77	300~1000		77.0	89.1	130	110		105	40	45					
	80	89.1	±0.90	300~1000		90.0	101.6	140	120		120		60					
	100	101.6	±1.02	350~1000		102.5	114.3	160	140		150		90					

Ordering Example: Part Number - L
PSEW50 - 600
PSEF100

Bracket only

Nominal	Unit Price: Round Flanged Trivalent Chromate PSEF	Round Flanged Electroless Nickel Plating PSEFM	Round Flanged Stainless Steel PSEFS	Compact Flanged Trivalent Chromate WPSEF	Compact Flanged Electroless Nickel Plating WPSEFM
30					
40					
50					
60					
70					
80					
100					

Set

Nominal	L	Unit Price: Round Flanged Trivalent Chromate Bracket 2 pcs. PSEW	Bracket 1 pc. PSE	Electroless Nickel Plating Bracket 2 pcs. PSEWM	Bracket 1 pc. PSEM	Black Oxide Bracket 2 pcs. PSEWK	Bracket 1 pc. PSEK	Stainless Steel Bracket 2 pcs. PSEWS	Bracket 1 pc. PSES	Compact Flanged Trivalent Chromate Bracket 2 pcs. WPSEW	Bracket 1 pc. WPSE	Electroless Nickel Plating Bracket 2 pcs. WPSEWM	Bracket 1 pc. WPSEM	Black Oxide Bracket 2 pcs. WPSEWK	Bracket 1 pc. WPSEK
30	200~400														
	401~600														
	601~800														
40	200~400														
	401~600														
	601~800														
50	200~400														
	401~600														
	601~800														
	801~1000														
60	200~400														
	401~600														
	601~800														
	801~1000														
70	300~400														
	401~600														
	601~800														
	801~1000														
80	300~400														
	401~600														
	601~800														
	801~1000														
100	350~400														
	401~600														
	601~800														
	801~1000														

Hollow Stand only

Nominal	L	Unit Price: Trivalent Chromate PPEW	Electroless Nickel Plating PPEWM	Stainless Steel PPEWS
30	200~ 400			
	401~ 600			
	601~ 800			
40	200~ 400			
	401~ 600			
	601~ 800			
50	200~ 400			
	401~ 600			
	601~ 800			
	801~1000			
60	200~ 400			
	401~ 600			
	601~ 800			
	801~1000			
70	300~ 400			
	401~ 600			
	601~ 800			
	801~1000			
80	300~ 400			
	401~ 600			
	601~ 800			
	801~1000			
100	350~ 400			
	401~ 600			
	601~ 800			
	801~1000			

Hollow Stands
Welded Type

Features: Hollow Stands with accurate heights that can also be used as a spacer.

Welded Type

Type: Round Flanged	Compact Flanged	M Material Hollow	Bracket	S Surface Treatment
PSYM	WPSYM	EN 1.0480 Equiv.	EN 1.0038 Equiv.	Electroless Nickel Plating
PSYK	-			Black Oxide

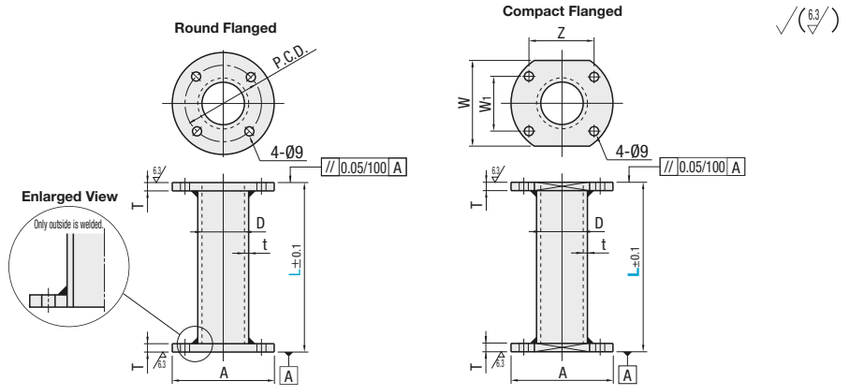

RoHS

Part Number Type	Nominal	L 1mm Increment	D		t	A	P.C.D.	T	W	Z	W1
Round Flanged PSYM PSYK	30	50~300	30	±0.40	4.0	90	70	10	56	56	34
	40		40			100	80		64	62	44
	50		50.8	±0.41		110	90		74	74	50
Compact Flanged WPSYM	60		60.5	±0.49	6.0	120	100	12	90	76	70
	70		70	±0.56		130	110		100	80	80

Ordering Example: Part Number - L
PSYM40 - 300

Nominal	L	Unit Price: Round Flanged Electroless Nickel Plating PSYM	Round Flanged Black Oxide PSYK	Compact Flanged Electroless Nickel Plating WPSYM
30	50~150			
	151~300			
40	50~150			
	151~300			
50	50~150			
	151~300			
60	50~150			
	151~300			
70	50~150			
	151~300			

Alterations: Part Number - L - (LKC)
PSYM40 - 300 - LKC

Alteration	Code	Spec.
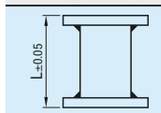	LKC	Changes the tolerance of L dimension to L±0.05. Ordering Code LKC

Example

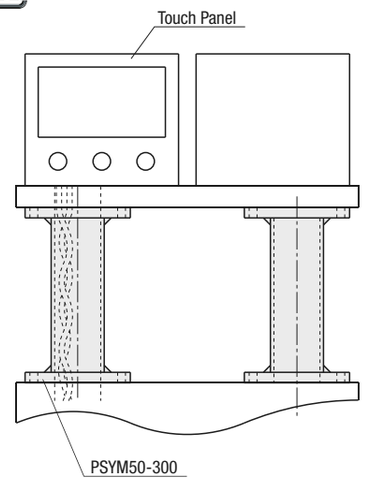

Hollow Stands

Pipe Threaded / Pipe Threaded, Welded

Features: Can be used with Rotary Connectors on **P.2191**. Select Welded Type for mounting touch panels or boxes.

Pipe Threaded

Pipe Threaded, Welded

RoHS

Pipe Threaded

Type: Round Flanged	Type: Compact Flanged	Material	Surface Treatment	Portion
PSEG	WPSEG	EN 1.0480 Equiv.	Electroless Nickel Plating	Hollow
		EN 1.0038 Equiv.		Bracket
PSEGK	WPSEGK	EN 1.0480 Equiv.	Black Oxide	Hollow
		EN 1.0038 Equiv.		Bracket
PSEGS	-	EN 1.4301 Equiv.	-	Hollow
		EN 1.4301 Equiv.		Bracket

Pipe Threaded, Welded

Type: Round Flanged	Type: Compact Flanged	Material	Surface Treatment	Portion
PSYG	WPSYG	EN 1.0480 Equiv.	Electroless Nickel Plating	Hollow
		EN 1.0038 Equiv.		Bracket

Pipe Threaded

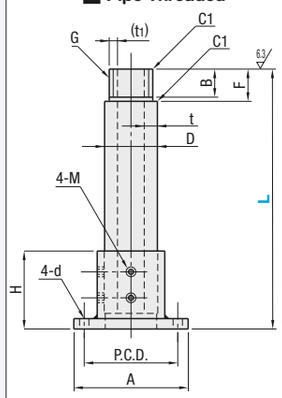

Round Flanged

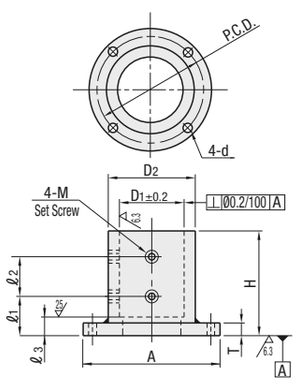

Compact Flanged

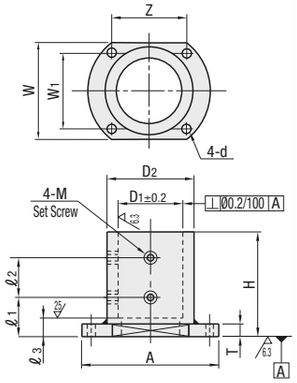

Pipe Threaded, Welded

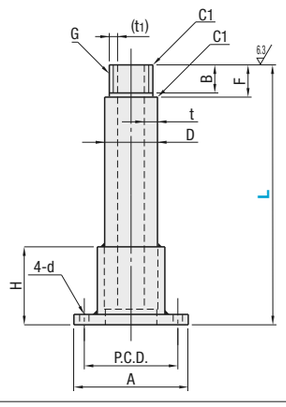

Round Flanged

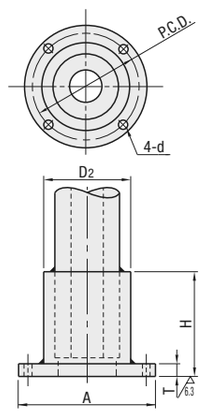

Compact Flanged

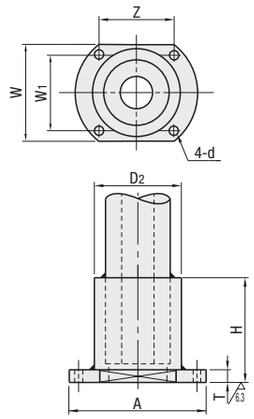

Part Number: Type		Nominal	G(PF): Nominal of Thread	G(PF): Thread O.D.	L 1mm Increment	F	B	D		D1	D2	t	(t1)	A	P.C.D.	H	d	M	T	H	ℓ1	ℓ2	ℓ3	W	Z	W1
Round Flanged PSEG, PSEGK, PSEGS	Welded Round Flanged PSYG	28	G1	33.25	200~800	26	23	40	±0.4	40.5	54	7	3.6	100	80	60	9	M6	10	60	25	25	15	64	62	44
		36	G1 1/4	41.91	200~1000	29	26	50.8	±0.41	51.5	65	8		110	90	75				75	30	30		74	74	50
		42	G1 1/2	47.80						51.5	65	5	3.5													
		54	G2	59.61		30	27	60.5	±0.49	61	76.3	4	3.6	120	100	90		M8	12	90	35	40	20	90	76	70
Compact Flanged WPSEG, WPSEGK	Welded Compact Flanged WPSYG	70	G2 1/2	75.18	300~1000	35	32	76.3	±0.56	77	89.1	5.5	4.9	130	110	105				105	40	45		100	80	80
		82	G3	87.88		40	37	89.1	±0.9	90	101.6	7	6.3	140	120	120				120		60		110	86	90
		92	G3 1/2	100.33				101.6	±1.02	102	120	6	5.3	160	140	150				150		90		130	94	110

- Parallel pipe thread is JIS B 0202 Class B.
- PSEGS is available for nominal 42 and 54 only.
- For rotary connectors, refer to **P.2191, 2192**
- Only for PSEGS54, t dimension is 4.9, and (t1) dimension is 4.4.

Ordering Example

Part Number	-	L
PSEG42	-	600
WPSYG54	-	300

Nominal	L Dimension	Unit Price: Pipe Threaded, Round Flanged, Electroless Nickel Plating PSEG	Pipe Threaded, Round Flanged, Black Oxide PSEGK	Pipe Threaded, Round Flanged, EN 1.4301 Equiv. PSEGS	Pipe Threaded, Compact Flanged, Electroless Nickel Plating WPSEG	Pipe Threaded, Compact Flanged, Black Oxide WPSEGK	Pipe Threaded, Welded, Round Flanged, Electroless Nickel Plating PSYG	Pipe Threaded, Welded, Compact Flanged, Electroless Nickel Plating WPSYG
28	Min. L ~ 400			-				
	L401 ~ 600			-				
	L601 ~ 800			-				
36	Min. L ~ 400			-				
	L401 ~ 600			-				
	L601 ~ 800			-				
	L801 ~ 1000			-				
42	Min. L ~ 400							
	L401 ~ 600							
	L601 ~ 800							
	L801 ~ 1000							
54	Min. L ~ 400							
	L401 ~ 600							
	L601 ~ 800							
	L801 ~ 1000							
70	Min. L ~ 400			-				
	L401 ~ 600			-				
	L601 ~ 800			-				
	L801 ~ 1000			-				
82	Min. L ~ 400			-				
	L401 ~ 600			-				
	L601 ~ 800			-				
	L801 ~ 1000			-				
92	Min. L ~ 400			-				
	L401 ~ 600			-				
	L601 ~ 800			-				
	L801 ~ 1000			-				

Example

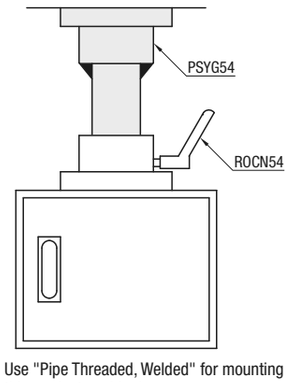

Use "Pipe Threaded, Welded" for mounting this product upside down.

<Reference Data on Tensile Load>

The Result of Fracture Test by the Following Measuring Method (N=3)

Nominal	Fracture Location	Fracture Load (kN) Max.	Fracture Load (kN) Min.	Deformation Amount (mm) Max.	Deformation Amount (mm) Min.
28	All at M8 Screws	186.016	181.891	0.907	0.666
54	All at M8 Screws	176.484	172.094	0.024	0.011

<Measuring Method of Tensile Load>

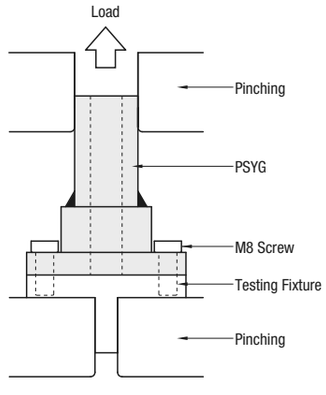

<Deformation Amount>

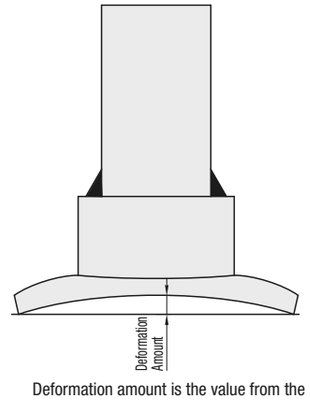

Deformation amount is the value from the flange sample's center area.

Rotary Connectors

Round Flanged / Compact Flanged

Features: Touch panels and boxes can be freely rotated.

Round Flanged

RoHS

Compact Flanged

RoHS

Type		M Material	S Surface Treatment	A Accessory		
Round Flanged	Compact Flanged			Clamp Lever	Screw	Nut
ROCN	WROCN	EN 1.0038 Equiv.	Electroless Nickel Plating	CLMD	CB8-20x4	LBNR8x4
ROCK	WROCK	EN 1.0038 Equiv.	Black Oxide	CLMD	CB8-20x4	LBNR8x4
ROCSH	WROCS	EN 1.4301 Equiv.	-	CLMS	SCB8-20x4	SLBNR8x4

Round Flanged

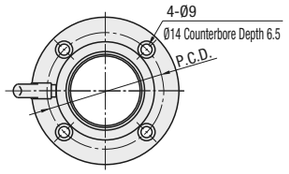

Compact Flanged

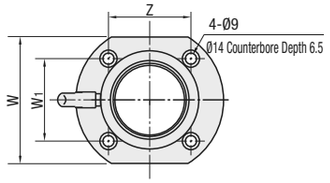

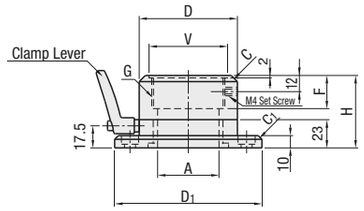

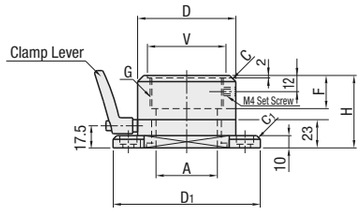

Structure with inner stopper prevents 360 rotation to prevent wiring from being twisted.
Avoid giving excessive impact to the internal stopper when rotating, otherwise, it may cause damages.

Part Number Type	Part Number Nominal	A	D	D1	G (PF)	F	H	C	V	P.C.D.	C1	W	W1	Z	Applicable Tube	*Reference Values X1(N)	*Reference Values X2(N)
Round Flanged ROCN ROCK ROCSH	28	20	50	85	G1	23	55	3	35	65	1.5	52	34	56	G28	16.4	23.5
	36	28	60	95	G1 1/4	26	58		45	75		62	44	62	G36	17.2	24.8
	42	33	65	100	G1 1/2			5	50	80		67	49	64	G42	18.4	30.3
Compact Flanged WROCN WROCK WROCS	54	48	80	120	G2	27	59		64	95	3	82	64	72	G54	19.6	32.3
	70	62	96	138	G2 1/2	32	63		78	112		98	76	82	G70	20.8	33.4
	82	72	106	148	G3	37	68		90	122		108	86	88	G80	22	34.1
	92	85	118	160	G3 1/2				103	134		120	94	96	G92	23.2	36.7

Take note that the applicable hollow tubes are based on JIS C 8305 Rigid Steel Conduits, but the thread section will be JIS B 0202 Parallel Threads for Tubes. (Threads for electrical conduits will not fit.)
* Please note the the reference values are not guaranteed.

Ordering Example

Part Number
ROCN42

Example

App. Example 1

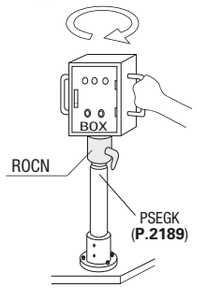

App. Example 2

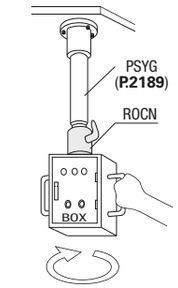

Nominal	Unit Price Round Flanged ROCN	Round Flanged ROCK	Round Flanged ROCSH	Compact Flanged WROCN	Compact Flanged WROCK	Compact Flanged WROCS
28			-			-
36			-			-
42						
54						
70			-			-
82			-			-
92			-			-

* Assume BOX load is 50kg.
・As shown in App. Example 1, X_1(N) is the force needed to turn the handle.
・As shown in App. Example 2, X_2(N) is the force needed to turn the handle.

Rotary Connectors

Moment Load Allowable - Single Flanged, Double Flanged

Features: Built-in oil-free bushings enable uses under moment loads.

Single Flanged

RoHS

Doubled Flanged

RoHS

Type		M Material	S Surface Treatment	A Accessory		
Single Flanged	Double Flanged			Clamp Lever	Screw	Nut
HRCN	HRCNW	EN 1.0038 Equiv.	Electroless Nickel Plating	CLMD	CB8-20x6	LBNR8×6

Single Flanged (HRCN)

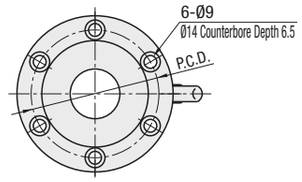

Doubled Flanged (HRCNW)

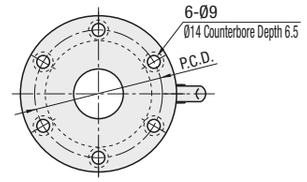

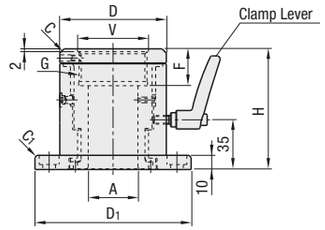

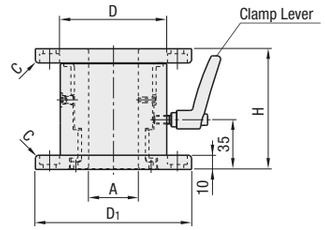

Structure with inner stopper prevents 360 rotation to prevent wiring from being twisted.
Avoid giving excessive impact to the internal stopper when rotating, otherwise, it may cause damages.

Single Flanged

Part Number Type	Part Number Nominal	A	D	D1	G (PF)	F	H	C	V	P.C.D.	C1	Applicable Tube	Allowable Moment Load (Calculated Values) N・m	Unit Price 1 ~ 4 pc(s).
HRCN	42	35	75	110	G1 1/2	26	85	3	50	90	1.5	G42	300	
	54	50	90	125	G2	27	85		64	105		G54	500	
	70	65	105	140	G2 1/2	32	85		78	120		G70	750	
	82	80	120	155	G3	37	90		92	135		G80	1000	

Take note that the applicable hollow tubes are based on JIS C 8305 Rigid Steel Conduits, but the thread section will be JIS B 0202 Parallel Threads for Tubes. (Threads for electrical conduits will not fit.)
Allowable moment loads are not guaranteed values.
For orders larger than indicated quantity, please request a quotation.

Doubled Flanged

Part Number Type	Part Number Nominal	A	D	D1	H	C	P.C.D.	Allowable Moment Load (Calculated Values) N・m	Unit Price 1 ~ 4 pc(s).
HRCNW	42	35	75	110	85	1.5	90	300	
	54	50	90	125	85		105	500	
	70	65	105	140	85		120	750	
	82	80	120	155	90		135	1000	

Allowable moment loads are not guaranteed values.
For orders larger than indicated quantity, please request a quotation.

Ordering Example

Part Number
HRCNW54

Example

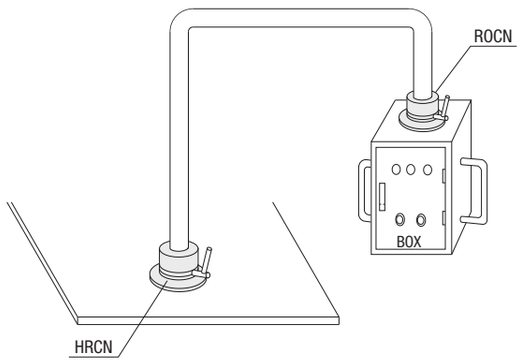

Usable under Moment Load

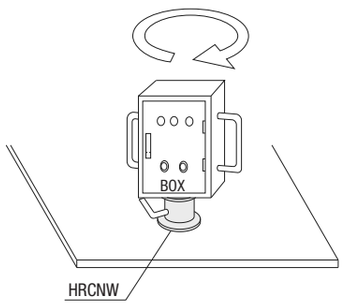

Box Mountable without a Hollow Stand